WAGNER

Translation of the Original Operating Manual

Wildcat
10-70
18-40

Puma
28-40
15-70
21-110
15-150

Leopard
35-70
35-150
48-110

Jaguar
75-150

Version 04/2015

IceBreaker Piston Pumps

Flow Rate 40 cm^3–150 cm^3

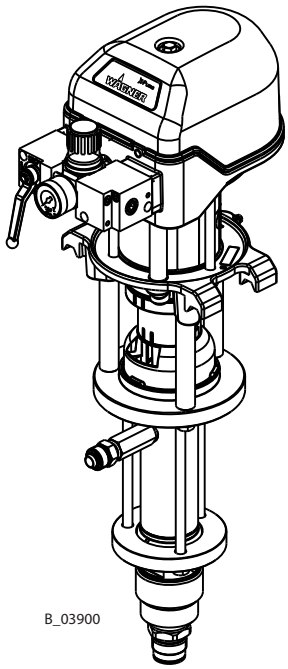

B_03900

CE Ex II 2 G c IIB T3/T4 X

Table of Contents

1	**ABOUT THESE INSTRUCTIONS**	**6**
1.1	Preface	6
1.2	Warnings, Notices and Symbols in these Instructions	6
1.3	Languages	7
1.4	Abbreviations in the Text	7
1.5	Terminology for the Purpose of this Manual	8
2	**CORRECT USE**	**9**
2.1	Device Types	9
2.2	Type of Use	9
2.3	Field of Application	9
2.4	Safety Parameters	9
2.5	Processible Working Materials	10
2.6	Recommended Application Areas	10
2.7	Reasonably Foreseeable Misuse	11
2.8	Residual Risks	11
3	**IDENTIFICATION**	**12**
3.1	Explosion Protection Identification	12
3.2	Identification X	12
3.3	Type Plate	13
4	**GENERAL SAFETY INSTRUCTIONS**	**14**
4.1	Safety Instructions for the Operator	14
4.1.1	Electrical Equipment	14
4.1.2	Personnel Qualifications	14
4.1.3	Safe Work Environment	14
4.2	Safety Instructions for Staff	15
4.2.1	Safe Handling of WAGNER Spray Devices	15
4.2.2	Grounding the Device	16
4.2.3	Product Hoses	16
4.2.4	Cleaning and Flushing	17
4.2.5	Handling Hazardous Liquids, Varnishes and Paints	18
4.2.6	Touching Hot Surfaces	18
5	**DESCRIPTION**	**19**
5.1	Design	19
5.2	Mode of Operation	19
5.3	Protective and Monitoring Equipment	20
5.4	Scope of Delivery	20
5.5	Data	21
5.5.1	Materials of Paint-wetted Parts	21
5.5.2	Recommended Packings	21
5.5.3	Technical Data	21
5.5.3.1	Technical Data for Wildcat and Puma	22
5.5.3.2	Measurements and Connections for Wildcat and Puma	23
5.5.3.3	Technical Data for Leopard and Jaguar	24
5.5.3.4	Measurements and Connections for Leopard and Jaguar	25
5.5.4	Volume Flow	26

Table of Contents

5.5.5	Performance Diagrams	27
5.6	Pressure Regulator Unit	30
5.7	Product Filter and Return Flow	30
5.7.1	High-Pressure Filter (Option)	30
5.7.2	Relief Combination and Inline Filter up to 270 bar (Option)	31
5.8	Stroke Count (Option)	31
5.9	Feed Pump (Option)	32
6	**ASSEMBLY AND COMMISSIONING**	**33**
6.1	Training Assembly/Commissioning Staff	33
6.2	Storage and Installation Conditions	33
6.3	Transportation	33
6.4	Assembly and Installation	34
6.4.1	Ventilation of the Spray Booth	34
6.5	Grounding	35
6.6	Commissioning	36
7	**OPERATION**	**37**
7.1	Training the Operating Staff	37
7.2	Safety Instructions	37
7.2.1	General Rules for Making Adjustments to the Spray Gun	38
7.3	Emergency Stop	38
7.4	Spraying	39
7.5	Pressure Relief/Work Interruption	39
7.6	Basic Flushing	40
7.6.1	Filling with Working Material	40
8	**CLEANING AND MAINTENANCE**	**41**
8.1	Cleaning	41
8.1.1	Cleaning Staff	41
8.1.2	Safety Instructions	41
8.1.3	Decommissioning and Cleaning	42
8.1.4	Long-term Storage	42
8.2	Maintenance	43
8.2.1	Maintenance Staff	43
8.2.2	Safety Instructions	43
8.2.3	Regular Maintenance Work	44
8.2.4	Filling Separating Agent	44
8.2.5	Condensate Drain from the AirCoat Filter Regulator	44
8.2.6	Emptying the Pump	45
8.2.7	Filling the Empty Pump	46
8.2.8	Cleaning and Replacing the Filter	47
8.2.8.1	Straight Inline Filter (270 bar)	47
8.2.8.2	Angled Inline Filter (270 bar)	47
8.2.8.3	High-pressure Filter 270 bar and 530 bar	48
8.2.9	Product Hoses, Tubes and Couplings	49
9	**TROUBLESHOOTING AND RECTIFICATION**	**50**

Table of Contents

10	**REPAIRS**	**51**
10.1	Repair Staff	51
10.2	Mounting Materials	51
11	**DISPOSAL**	**51**
12	**ACCESSORIES**	**52**
12.1	Wildcat and Puma Pumps	52
12.1.1	Material Outlet and Miscellaneous	52
12.1.2	Material Inlet	54
12.1.3	Trolley, Rack and Wall Mount Accessories	56
12.2	Accessories for Leopard and Jaguar Pumps	58
12.2.1	Material Outlet and Miscellaneous	58
12.2.2	Material Inlet	60
12.2.3	Trolley and Wall Bracket Accessories	62
13	**SPARE PARTS**	**63**
13.1	How Can Spare Parts Be Ordered?	63
13.2	Overview of the Components	64
13.3	Air Motors	68
13.3.1	Wildcat, Puma, Leopard Air Motors	68
13.3.2	Wildcat and Puma Air Motor Regulators	72
13.3.3	Leopard Air Motor Regulator	73
13.3.4	Jaguar Air Motor	74
13.3.5	Jaguar Air Motor Regulator	78
13.4	Connection Sets	79
13.4.1	Connection Sets for 40–70 cm3	79
13.4.2	Connection Sets for 110–150 cm3	80
13.5	Fluid Sections	81
13.5.1	Fluid Sections 40 cm3	81
13.5.2	Fluid Sections 70 cm3	84
13.5.3	Fluid Sections 110 cm3	87
13.5.4	Fluid Sections 150 cm3	90
13.6	Inlet Valve with Valve Depressor	93
13.7	Relief Combination 270 bar	95
13.8	Straight Inline Filter 270 bar	96
13.9	Angled Inline Filter 270 bar	97
13.10	High-pressure Filter 270 bar	98
13.11	High-pressure Filter 530 bar	100
13.12	AirCoat Regulator and AirCoat Filter Regulator	102
13.13	Trolley for Wildcat, Puma and Leopard	103
13.14	Trolley for Leopard 48-110 and Jaguar	104
14	**WARRANTY AND CONFORMITY DECLARATIONS**	**105**
14.1	Important Notes Regarding Product Liability	105
14.2	Warranty Claim	105
14.3	CE Declaration of Conformity	106
14.4	Notes on National Regulations and Guidelines	106

1 ABOUT THESE INSTRUCTIONS

1.1 PREFACE

The operating manual contains information about safely operating, maintaining, cleaning and repairing the device.
The operating manual is part of the device and must be available to operating and service staff.
The device may only be operated by trained staff and in compliance with this operating manual. Operating and service personnel should be instructed according to the safety instructions.
This equipment can be dangerous if it is not operated according to the instructions in this operating manual.

1.2 WARNINGS, NOTICES AND SYMBOLS IN THESE INSTRUCTIONS

Warning instructions in this operating manual highlight particular dangers to users and to the device and state measures for avoiding the hazard. These warning instructions fall into the following categories:

Danger - immediate risk of danger.
Non-observance will result in death or serious injury.

⚠ DANGER

This notice warns you of a hazard!
Possible consequences of not observing the warning instructions.
The signal word indicates the hazard level.

→ The measures for preventing the danger and its consequences.

Warning - possible imminent danger.
Non-observance may result in death or serious injury.

⚠ WARNING

This notice warns you of a hazard!
Possible consequences of not observing the warning instructions.
The signal word indicates the hazard level.

→ The measures for preventing the danger and its consequences.

Caution - a possibly hazardous situation.
Non-observance may result in minor injury.

⚠ CAUTION

This notice warns you of a hazard!
Possible consequences of not observing the warning instructions.
The signal word indicates the hazard level.

→ The measures for preventing the danger and its consequences.

Notice - a possibly hazardous situation.
Non-observance may result in damage to property.

NOTICE

This notice warns you of a hazard!
Possible consequences of not observing the warning instructions. The signal word indicates the hazard level.

→ The measures for preventing the danger and its consequences.

Note - provides information about particular characteristics and how to proceed.

1.3 LANGUAGES

The operating manual is available in the following languages:

Language	Order No.	Language	Order No.	Language	Order No.
German	2333537	English	2333538	French	2333539
Italian	2333540	Spanish	2333541	Japanese	2338088
Russian	2351629	Hungarian	2352104		

The corresponding service manuals are available under the following order number:

Language	Order No.	Language	Order No.
German	2335993	English	2335994

Additional languages on request or at: **www.wagner-group.com**

1.4 ABBREVIATIONS IN THE TEXT

Stk	Number of pieces
Pos	Position
K	Marking in the spare parts lists
Order No.	Order number
DH	Double stroke
DN	Nominal diameter
PN	Nominal pressure
2K	Two components

Materials

SSt	Stainless steel
PE	Polyethylene
UHMWPE	Ultra-high molecular weight polyethylene
PTFE	Polytetrafluorethylene
TG	PTFE with graphite
T	PTFE
L	Leather

1.5 TERMINOLOGY FOR THE PURPOSE OF THIS MANUAL

Cleaning	Manual cleaning of devices and device parts with cleaning agent
Flushing	Internal flushing of paint-wetted parts with flushing agent

Staff qualifications

Trained person	Is instructed in the tasks assigned to him/her, the potential risks associated with improper behavior as well as the necessary protective devices and measures.
Electrically trained person	Is instructed by an electrician about the tasks assigned to him/her, the potential risks associated with improper behavior as well as the necessary protective devices and measures.
Electrician	Can assess the work assigned to him/her and detect possible hazards based on his/her technical training, knowledge and experience in relevant provisions.
Skilled person In the context of TRBS 1203 (2010 / Revision 2012)	A person who, based on his/her technical training, experience and recent vocational experience, has sufficient technical knowledge and is familiar with the relevant and generally accepted rules of technology so that he/she can inspect and assess the status of devices and coating systems based on workplace safety. → Additional requirements for skilled persons are given in the TRBS 1203 (2010/Revision 2012): Expert knowledge in the areas of protection against excessive pressure, electrical hazards, and explosion protection (where applicable).

2 CORRECT USE

2.1 DEVICE TYPES

Pneumatic pump with spraypack:

Wildcat	Puma	Leopard	Jaguar
10-70	28-40	35-70	75-150
18-40	15-70	35-150	
	21-110	48-110	
	15-150		

2.2 TYPE OF USE

The device is suitable for processing liquid materials like paints and lacquers in accordance with the classification into explosion classes IIA or IIB.

2.3 FIELD OF APPLICATION

The pneumatic pump can be used in potentially explosive areas (Zone 1). → See Chapter 3.

2.4 SAFETY PARAMETERS

WAGNER accepts no liability for any damage arising from incorrect use.

- → Use the device only to work with the products recommended by WAGNER.
- → Only operate the device as a whole.
- → Do not deactivate safety fixtures.
- → Use only WAGNER original spare parts and accessories.

The pneumatic pump may only be operated under the following conditions:

- → The operating staff must be trained on the basis of this operating manual.
- → The safety regulations listed in this operating manual must be observed.
- → The operating, maintenance and repair information in this operating manual must be observed.
- → The statutory requirements and accident prevention regulation standards in the country of use must be observed.

2.5 PROCESSIBLE WORKING MATERIALS

Working materials	WILDCAT 18-40 10-70	PUMA 28-40	PUMA 15-70 21-110 15-150	LEOPARD 35-70	LEOPARD 35-150 48-110	JAGUAR 75-150
Water-dilutable products	↗	↗	↗	↗	↗	↗
Solvent-based lacquers and paints	↗	↗	↗	↗	↗	↗
Primers	➡	➡	➡	↗	↗	↗
Epoxy and polyurethane lacquers, phenolic lacquers	➡	↗	➡	↗	↗	↗
Liquid plastics	↘	➡	↘	↗	↗	↗
Wax-based underside protection	↘	↘	↘	↗	↗	↗
Chemically aggressive products that attack carbide seats	↘	↘	↘	↘	↘	↘

Legend: ↗ recommended ➡ limited suitability ↘ less suitable

NOTICE

Abrasive working materials and pigments!
Greater wear of parts carrying the product.

→ Do not use any grainy and abrasive working materials with large, sharp-edged pigments.
→ Use the application-related model (flow rate/cycle, material packaging, valve seat, etc.), as specified in Chapter 5.5.
→ Check if the fluids and solvents used are compatible with the pump construction materials as indicated in Chapter 5.5.1.

Wear caused by abrasive working materials is not covered by the warranty.

2.6 RECOMMENDED APPLICATION AREAS

Application area	WILDCAT 18-40 10-70	PUMA 28-40	PUMA 15-70 21-110 15-150	LEOPARD 35-70	LEOPARD 35-150 48-110	JAGUAR 75-150
Furniture industry	↗	↗	↗	↗	↗	↘
Kitchen manufacturers	↗	↗	↗	↗	↗	↘
Joinery	↗	↗	↗	➡	↘	↘
Window factories	➡	➡	↗	↗	↗	↘
Steel-processing industry	↘	➡	↘	↗	↗	↗
Construction of vehicles	↗	↗	↗	↗	➡	➡
Shipbuilding	↘	↘	↘	➡	➡	↗

Legend: ↗ recommended ➡ limited suitability ↘ less suitable

2.7 REASONABLY FORESEEABLE MISUSE

The forms of misuse listed below may result in physical injury or property damage:

- → coating work pieces which are not grounded;
- → unauthorized conversions or modifications to the pneumatic pump;
- → processing dry or similar coating products, e.g., powder;
- → using defective components, spare parts or accessories other than those described in the "Accessories" chapter of this operating manual;
- → continuing work with a defective or kinked product hose;
- → working with incorrectly set values;
- → processing food.

2.8 RESIDUAL RISKS

Residual risks are risks which cannot be ruled out even in the event of correct use.
If necessary, warning and prohibition signs at the relevant points of risk indicate residual risks.

Residual risk	Source	Consequences	Specific measures	Lifecycle phase
Skin contact with lacquers and cleaning agents	Handling of lacquers and cleaning agents	Skin irritation, allergies	Use personal safety equipment. Observe safety data sheets	Operation, maintenance, disassembly
Lacquer in air outside the defined working area	Lacquering outside the defined working area	Inhalation of substances hazardous to health	Observe work and operation instructions. Use personal safety equipment	Operation, maintenance

3 IDENTIFICATION

3.1 EXPLOSION PROTECTION IDENTIFICATION

As defined in Directive 94/9/EC (ATEX 95), the device is suitable for use in potentially explosive areas.

CE Ex II 2 G c IIB T3/T4 X

CE	CE mark (European Communities)
Ex	Explosion-proof equipment
II	Device class II (not mining)
2	Category 2 device (suitable for zone 1)
G	Ex-atmosphere gas
c	Constructional security
IIB	Device class (Gas) IIB
T3	Temperature class T3: maximum surface temperature 200 °C; 392 °F
T4	Temperature class T4: maximum surface temperature 135 °C; 275 °F
X	There are special notices for safe operation → See the following Chapter "Identification X".

3.2 IDENTIFICATION X

Maximum surface temperature
The maximum surface temperature of the piston pump can be reached if it runs dry.

→ Ensure that the piston pump is filled with sufficient working or flushing agent.
→ Ensure that the separating agent tank is filled with sufficient separating agent.

Temperature class T3: No dry running protection.
Temperature class T4: With dry running protection.

Ignition temperature
→ Ensure that the ignition temperature of the surrounding gases (pumping product, cleaning agents) is higher than the maximum permitted surface temperature of the device.

Ambient temperature
→ The permissible ambient temperature is: +5 °C to +50 °C; +41 °C to +122 °F.

Medium supporting atomizing
→ To atomize the product, use only weakly oxidizing gases, e.g., air.

Safe handling of WAGNER spray devices

Mechanical sparks can form if the device comes into contact with metal.
In an explosive atmosphere:
→ Do not knock or push the device against steel or rusty iron.
→ Do not drop the device.
→ Use only tools that are made of a permitted material.

Surface spraying, electrostatics

→ Do not spray device parts using electrostatic equipment.

Cleaning

If there are deposits on the surfaces, the device may form electrostatic charges. Flames or sparks can form during discharge.
→ Remove deposits from the surfaces to maintain conductivity.
→ Use only a damp cloth to clean the device.

National regulations

→ Ensure that the national explosion prevention rules and regulations are observed when setting up the device.

Air in the pump fluid

Flammable gas mixtures can form if air reaches the pump fluid.
→ Prevent the pump from taking in air and running dry.
→ If air has been taken in, fix the leak. Then, fill slowly and in a controlled manner until the air has escaped.

Air in the pumped fluid can be caused by damaged packings.
→ Avoid operating the pump with damaged packing.
→ Ensure that the separating fluid tank is filled with sufficient separating fluid.
→ Periodically check that the pump is working smoothly, paying special attention to the presence of air in the pumped fluid.

Filling and emptying

Flammable gas mixtures can form in the fluid section or product hoses if the pump must be emptied for maintenance.
→ Empty and fill the device slowly and in a controlled manner.
→ Avoid potentially explosive atmosphere in the surroundings.

3.3 TYPE PLATE

1 Manufacturer and CE Identification
2 Pump type
3 Maximum product pressure
4 Pump ratio
5 Flow rate per double stroke
6 Maximum air inlet pressure
7 Maximum product temperature
8 Model year - Serial number
9 Read operating manual before use!

4 GENERAL SAFETY INSTRUCTIONS

4.1 SAFETY INSTRUCTIONS FOR THE OPERATOR

→ Keep this operating manual at hand near the device at all times.
→ Always follow local regulations concerning occupational safety and accident prevention.

4.1.1 ELECTRICAL EQUIPMENT

Electrical devices and equipment
→ To be provided in accordance with the local safety requirements with regard to the operating mode and ambient influences.
→ May only be maintained by skilled electricians or under their supervision. With open housings, there is a danger from line voltage.
→ Must be operated in accordance with the safety regulations and electrotechnical regulations.
→ Must be repaired immediately in the event of problems.
→ Must be decommissioned if they pose a hazard or are damaged.
→ Must be de-energized before work is commenced on active parts. Inform staff about planned work. Observe electrical safety regulations.
→ Ground all devices to a common grounding point.
→ Only operate the device with a properly installed socket with a protective ground wire connection.
→ Keep liquids away from electrical devices.

4.1.2 PERSONNEL QUALIFICATIONS

→ Ensure that the device is operated and repaired only by trained persons.

4.1.3 SAFE WORK ENVIRONMENT

→ Ensure that the floor in the working area is static dissipative in accordance with EN 61340-4-1 (resistance must not exceed 100 megohms).
→ Paint mist extraction systems/ventilation systems must be fitted on site according to local regulations.
→ Ensure that product / air hoses adapted to the working pressure are used.
→ Ensure that personal protective equipment is available and is used.
→ Ensure that all persons within the working area wear static dissipative shoes. Footwear must comply with EN 20344. The measured insulation resistance must not exceed 100 megohms.

→ Ensure that during spraying, persons wear static dissipative gloves. The grounding takes place via the spray gun handle.
→ Protective clothing, including gloves, must comply with EN 1149-5. The measured insulation resistance must not exceed 100 megohms.
→ Ensure that there are no ignition sources such as naked flames, sparks, glowing wires, or hot surfaces in the vicinity. Do not smoke.

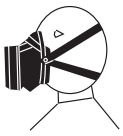

→ Ensure that the pipe joints, hoses, equipment parts and connections are permanently, technically leak-proof:
- Periodic preventative maintenance and service (replacing hoses, checking tightness strength and connections, etc.)
- Regular monitoring of leaks and defects via visual inspection and odor testing, e.g., daily before commissioning, at the end of work or weekly.

→ In the event of defects, immediately bring the device or system to a stop and arrange to have repairs carried out immediately.

Grounding
→ Make sure that the ground and potential equalization of all system parts are performed reliably and continuously and can withstand the expected stress (e.g. mechanical stress, corrosion).

4.2 SAFETY INSTRUCTIONS FOR STAFF

→ Always follow the information in this manual, particularly the general safety instructions and the warning instructions.
→ Always follow local regulations concerning occupational safety and accident prevention.
→ In electrostatics application: Anyone fitted with a pacemaker must not enter the high-voltage area!

4.2.1 SAFE HANDLING OF WAGNER SPRAY DEVICES

The spray jet is under pressure and can cause dangerous injuries.
Avoid injection of paint or flushing agents:
→ Never point the spray gun at people.
→ Never reach into the spray jet.
→ Before all work on the device, in the event of work interruptions and functional faults:
- Relieve pressure from spray guns and devices.
- Secure spray guns against actuation.
- Switch off the energy/compressed air supply.
- Disconnect the control unit from the mains.
- In the event of functional faults, remedy the fault as described in the "Troubleshooting" chapter.

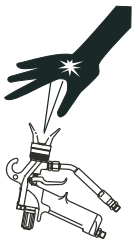

→ If needed, the liquid ejection devices must be checked by experts (e.g. Wagner service technician) at least every 12 months for their work-safe condition in accordance with DGUV regulation 100-500.
- For shut down devices, the examination can be suspended until the next start-up.

→ Carry out the work steps as described in the "Pressure Relief" chapter:
- If pressure relief is required.
- If the spraying work is interrupted or stopped.
- Before the device is cleaned on the outside, checked or serviced.
- Before the spray nozzle is installed or cleaned.

In the event of skin injuries caused by paint or flushing agents:
→ Note the paint or flushing agent that you have been using.
→ Consult a doctor immediately.

Avoid risk of injury from recoil forces:
→ Ensure that you have firm footing when operating the spray gun.
→ Only hold the spray gun briefly in a position.

4.2.2 GROUNDING THE DEVICE

Friction, flowing liquids and air or electrostatic coating processes create charges. Flames or sparks can form during discharge. Grounding prevents electrostatic charging.

→ Ensure that the device is grounded. → See chapter "Grounding".
→ Ground the work pieces to be coated.
→ Ensure that all persons inside the working area are grounded, e.g., that they are wearing static dissipative shoes.
→ Wear static dissipative gloves when spraying. The grounding takes place via the spray gun handle.
→ The spray substance supply (spray substance tank, pump, etc.) must be grounded.

4.2.3 PRODUCT HOSES

→ Ensure that the hose material is chemically resistant to the sprayed products and the flushing agents used.
→ Ensure that the product hose is suitable for the pressure generated.
→ Ensure that the following information can be seen on the high pressure hose:
- Manufacturer
- Permissible operating pressure
- Date of manufacture

→ Make sure that the hoses are laid only in suitable places. Do not lay hoses:
- In high-traffic areas
- At sharp edges
- On moving parts
- On hot surfaces

→ Ensure that the hoses are never run over by vehicles (e.g., fork lifts), or that the hoses are never put under pressure from the outside in any other way.
→ Ensure that the hoses are never kinked. Observe maximum bending radii.
→ Make sure that the hoses are never used to pull or move the equipment.
→ The electrical resistance of the product hose, measured at both valves, must be less than 1 megohm.
→ Suction hoses may not be subjected to pressure.

Several liquids have a high expansion coefficient. In some cases their volume can rise with consequent damage to pipes, fittings, etc. and cause fluid leakage.
When the pump sucks liquid from a closed tank, ensure that air or a suitable gas can enter the tank. Thus a negative pressure is avoided. The vacuum could implode the tank (squeeze) and can cause it to break. The tank would leak and the liquid would flow out.
The pressure created by the pump is a multiplication of the inlet air pressure.

4.2.4 CLEANING AND FLUSHING

→ Relieve the pressure from the device.
→ De-energize the device electrically.
→ Preference should be given to non-flammable cleaning and flushing agents.
→ When carrying out cleaning work with flammable cleaning agents, make sure that all equipment and resources (e.g. collection tank, funnel, transport cart) are conductive or static dissipative and grounded.
→ Observe the specifications of the paint manufacturer.
→ Ensure that the flash point of the cleaning agent is at least 15 K above the ambient temperature or that cleaning is undertaken at a cleaning station with technical ventilation.
→ Take measures for workplace safety (see Chapter 4.1.3).
→ When commissioning or emptying the device, please note that an explosive mixture may temporarily exist inside the lines and components of equipment:
- depending on the coating product used,
- depending on the flushing agent (solvent) used,
explosive mixture inside the lines and items of equipment.

→ Only electrically conductive tanks may be used for cleaning and flushing agents.
→ The containers must be grounded.

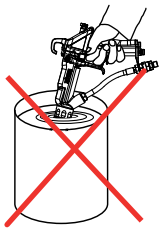

An explosive gas/air mixture forms in closed containers.
→ Never spray into a closed tank when using solvents for flushing.

External cleaning
When cleaning the exterior of the device or its parts, also observe the following:
→ Disconnect the pneumatic supply line.
→ Use only moistened cloths and brushes. Never use abrasive agents or hard objects and never spray cleaning agents with a gun. Cleaning the device must not damage it in any way.
→ Ensure that no electric component is cleaned with or immersed into solvent.

4.2.5 HANDLING HAZARDOUS LIQUIDS, VARNISHES AND PAINTS

→ When preparing or working with lacquer and when cleaning the device, follow the working instructions of the manufacturer of the lacquers, solvents and cleaning agents being used.
→ Take the specified protective measures. In particular, use personal protective equipment: safety goggles, protective clothing and gloves, as well as respiratory protection and skin protection cream if necessary.
→ Use a mask or breathing apparatus if necessary.
→ For sufficient health and environmental safety: Operate the device in a spray booth or on a spraying wall with the ventilation (extraction) switched on.
→ Wear suitable protective clothing when working with hot products.

4.2.6 TOUCHING HOT SURFACES

→ Only touch hot surfaces if you are wearing protective gloves.
→ When operating the device with a coating product with a temperature of > 43 °C; 109 °F: identify the unit with a warning label that says "Warning - Hot Surface".
- Instruction label Order No. 9998910
- Protection label Order No. 9998911

Note: Order the two stickers together.

5 DESCRIPTION

5.1 DESIGN

1 Control housing with integrated silencer
2 Air pressure regulator
3 Ball Valve
4 Air motor
5 Compressed air Inlet
6 Mounting flange
7 Separating agent cup
8 Material outlet
9 Fluid section
10 Material inlet
11 Grounding connection

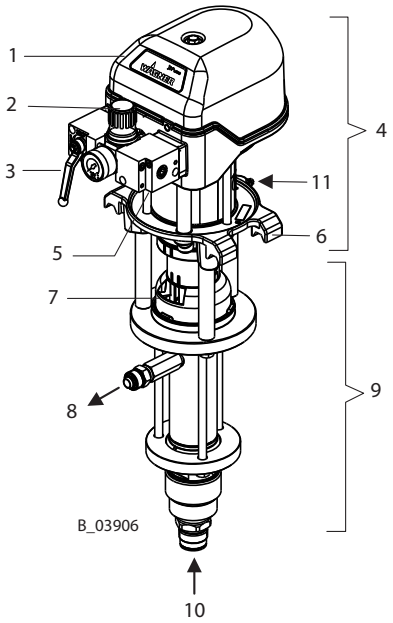

5.2 MODE OF OPERATION

The piston pump is driven with compressed air (2). This compressed air moves the air piston up and down in the air motor (4) and it also moves the associated pump piston up and down in the fluid section (9).
In the control housing (1), the air pressure is redirected at the end of each stroke with the help of the reversing valve. The working material is sucked up during the upwards stroke and is continuously conveyed towards the product outlet (8) in both stroke directions.

Air motor (4)
The air motor with its pneumatic reverse (1) does not require pneumatic oil.
The compressed air is fed to the motor via the air regulator (2) and the ball valve (3).

Fluid section (9)
The fluid section has been designed as a piston pump with exchangeable ball valves. The hard chrome-plated pump piston runs in two fixed packings which are self-adjusting by means of a pressure spring, thus resulting in a long service life.

Between the air motor and the fluid section there is a separating agent cup (7) for separating the separating agent.

5.3 PROTECTIVE AND MONITORING EQUIPMENT

Safety valve

The air motor is fitted with a safety valve. The safety valve has been set and sealed at the factory. In case of pressures over and above the permissible operating pressure, the valve, which is held with a spring, automatically opens and releases the excess pressure.

⚠ WARNING

Overpressure!
Risk of injury from bursting components.

→ Never change the safety valve setting.

5.4 SCOPE OF DELIVERY

Pneumatic piston pump
Consists of:
- Fluid section
- Air motor
- Connection set for air motor - fluid section
- Air pressure regulator for air motor

The scope of delivery also includes:

Separating agent 250 ml; 250 cc	Order No.: 9992504
Declaration of conformity	See Chapter 14.3
Operating manual, German	Order No.: 2333537
Operating manual in the local language	See Chapter 1.3

The delivery note shows the exact scope of delivery. Accessories: see Chapter 12.

5.5 DATA

5.5.1 MATERIALS OF PAINT-WETTED PARTS

Housing	Stainless steel
Piston	Stainless steel and hard chrome
Valve balls	Stainless steel
Valve seats	Carbide
O-rings	PTFE
Packings	Standard PE/ TG

PE = Ultra high molecular weight polyethylene
TG = PTFE with graphite

5.5.2 RECOMMENDED PACKINGS

WAGNER packings are manufactured in four different materials:

Code	Product	Color
L	Leather	dark brown
TG	PTFE with graphite	black
PE	Ultra high molecular weight polyethylene	transparent
T	PTFE	white

Each product has the following properties, which influence the packings:

	L	TG	PE	T
Mechanical stability	poor	good	good	poor
Friction coefficient	poor	very good	good	very good
Sealing force	good*	good	good	good
Chemical resistance	poor	good	very good	very good
Temperature resistance	good	poor - good	very good	poor

* for abrasive products

Standard combinations

Standard pumps:	PE/TG
Heavy-duty (high-pressure) pumps:	PE/L
Hardener pumps in 2K systems:	PE/T

5.5.3 TECHNICAL DATA

⚠ WARNING

Outgoing air containing oil!
Risk of poisoning if inhaled.
Air motor switching problems.

→ Provide water-free and oil-free compressed air

5.5.3.1 TECHNICAL DATA FOR WILDCAT AND PUMA

Description	Units	WILDCAT 10-70	WILDCAT 18-40	PUMA 28-40	PUMA 15-70	PUMA 21-110	PUMA 15-150
Pump ratio		10 :1	18 :1	28 : 1	15 :1	21:1	15 :1
Volume flow per double stroke (DH)	cm^3; cc	70	40	40	70	110	150
Maximum operating overpressure	MPa bar psi	8 80 1160	14.4 144 2089	22.4 224 3249	12 120 1740	16.8 168 2436	12 120 1740
Maximum possible strokes in operation	DH/min.	60					
Maximum recommended strokes per minute in continuous operation	DH/min.	40					
Minimum/maximum air inlet pressure	MPa bar psi	0.25-0.8 2.5-8 36-116					
Compressed air quality: free from oil and water	Quality standard 7.5.4 according to ISO 8573.1, 2010 7: Particle concentration 5 – 10 mg/m^3 5: Humidity: Pressure dew point ≤ +7 °C 4: Oil content ≤ 5 mg/m^3						
Ø air inlet connection (inside thread)	inch	G 1/2"					
Minimum Ø of the compressed air supply line	mm; inch	9; 0.35					
Air consumption at 0.6 MPa; 6 bar; 87 psi per double stroke	nl scf	5.3 0.19		8.3 0.29		16.5 0.58	
Air motor piston diameter	mm; inch	80; 3.2		100; 4			
Air motor piston stroke	mm; inch	75; 3		75; 3		150; 6	
Sound pressure level at maximum permissible air pressure*	dB(A)	77	77	78	77	78	78
Sound pressure level at 0.6 MPa; 6 bar; 87 psi air pressure*	dB(A)	74	74	74	74	74	74
Sound pressure level at 0.4 MPa; 4 bar; 58 psi air pressure*	dB(A)	69	69	69	69	69	69
Product inlet (outside thread)	mm	M 36x2					
Product outlet (outside thread)	mm	M 24x1.5					
Weight	kg; lb	17; 38	15; 33	16; 35	18; 40	28; 62	
Product pH value	pH	3.5–9					
Maximum product pressure at pump inlet	MPa bar psi	2 20 290					
Material temperature	°C; °F	+5…+80; +41…+176					
Ambient temperature – Construction and assembly	°C; °F	+5…+50; +41…+122					
Ambient temperature – Suspension	°C; °F	-20…+60; -4…+140					
Relative humidity	%	10–95 (without condensation)					
Allowable inclination for operation	<) °	± 10					

* A-rated sound pressure level measured at 1-m distance, LpA1m, according to DIN EN 14462: 2005. Reference measurements have been made by SUVA (Swiss Accident Insurance Institute).

5.5.3.2 MEASUREMENTS AND CONNECTIONS FOR WILDCAT AND PUMA

	WILDCAT 10-70 mm; inch	WILDCAT 18-40 mm; inch	PUMA 28-40 mm; inch	PUMA 15-70 mm; inch	PUMA 21-110 mm; inch	PUMA 15-150 mm; inch
A	736; 29	722; 28.4		736; 29	1034; 40.7	
B	169; 6.7					
C	~ 321; 12.6					
D	261.5; 10.3				336; 13.2	
E	474.5; 18.7	460.5; 18.1		474.5; 18.7	698; 27.5	
F	134; 5.3					
G	182; 7.2					
H	80; 3.2					
I	ø 25; ø 1					
J	M6					
K	M36x2					
L1	M24x1.5					
L2	G3/8"					
M	G1/2"					
N	G1/4"					
O	106; 4.2					
P	96.5; 3.8					
Q	ø 9; ø 0.35					
R	ø 7; ø 0.28					
S	149; 5.9					
T	55; 2.2					

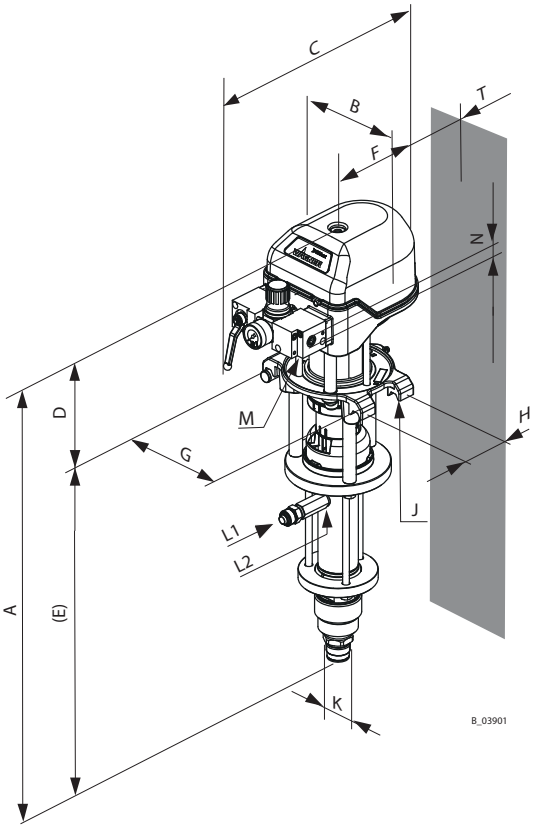

Wall mount

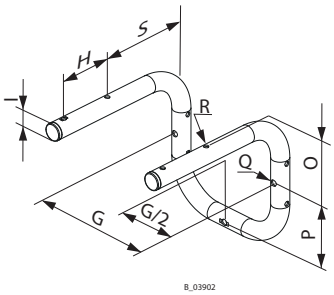

5.5.3.3 TECHNICAL DATA FOR LEOPARD AND JAGUAR

Description	Units	LEOPARD 35-70	LEOPARD 48-110	LEOPARD 35-150	JAGUAR 75-150
Pump ratio		35:1	48:1	35:1	75:1
Volume flow per double stroke (DH)	cm^3; cc	70	110	150	150
Maximum operating overpressure	MPa bar psi	25 250 3626	37 370 5366	27 270 3916	53 530 7687
Maximum possible strokes in operation	DH/min	60			
Maximum recommended strokes per minute in continuous operation	DH/min	40			
Minimum/maximum air inlet pressure	MPa bar psi	0.25-0.71 2.5-7.1 36-103	0.25-0.8 2.5-8 36-116	0.25-0.77 2.5-7.7 36-112	0.25-0.71 2.5-7.1 36-103
Compressed air quality: free from oil and water	Quality standard 7.5.4 according to ISO 8573.1, 2010 7: Particle concentration 5 – 10 mg/m^3 5: Humidity: Pressure dew point ≤ +7 °C 4: Oil content ≤ 5 mg/m^3				
Ø air inlet connection (inside thread)	inch	G1/2"			G1"
Minimum Ø of the compressed air supply line	mm; inch	13; 0.51			25; 0.98
Air consumption at 0.6 MPa; 6 bar; 87 psi per double stroke	nl scf	18.6 0.66	37.3 1.32		79.9 2.82
Air motor piston diameter	mm; inch	150; 6			220; 8.7
Air motor piston stroke	mm; inch	75; 3	150; 6		
Sound pressure level at maximum permissible air pressure*	dB(A)	77	78	80	83
Sound pressure level at 0.6 MPa; 6 bar; 87 psi air pressure*	dB(A)	74		78	81
Sound pressure level at 0.4 MPa; 4 bar; 58 psi air pressure*	dB(A)	71	69	74	
Product inlet (outside thread)	mm	M36x2			
Product outlet (outside thread)	mm	M24x1.5			
Weight	kg; lb	26; 57	36; 79		53; 117
Product pH value	pH	3.5–9			
Maximum product pressure at pump inlet	MPa bar psi	2 20 290			
Material temperature	°C; °F	+5…+80; +41…+176			
Ambient temperature – Construction and assembly	°C; °F	+5…+50; +41…+122			
Ambient temperature – Suspension	°C; °F	-20…+60; -4…+140			
Relative humidity	%	10–95 (without condensation)			
Allowable inclination for operation	<) °	± 10			

* A rated sound pressure level measured at 1 m distance, LpA1m, according to DIN EN 14462: 2005. Reference measurements have been made by SUVA (Swiss Accident Insurance Institute).

5.5.3.4 MEASUREMENTS AND CONNECTIONS FOR LEOPARD AND JAGUAR

	LEOPARD 35-70 mm; inch	LEOPARD 48-110 mm; inch	LEOPARD 35-150 mm; inch	JAGUAR 75-150 mm; inch
A	799; 31.5	1080; 42.5		1200; 47.2
B	240; 9.4			304; 12
C	~ 434; 17.1			~595; 23.4
D	305; 12	380; 15		516; 20.3
E	490; 19.3	705; 27.6		684; 26.9
F	192; 7.6			244; 9.6
G	230; 9.1			
H	110; 4.3			
I	20x35; 0.8x1.4			20x48; 0.8x1.9
J	M6			M8
K	M36x2			
L1	M24x1.5			
L2	G3/8"			
M	G1/2"			G1"
N	G1/4"			-
O	129; 5.1			135.5; 5.3
P	111.5; 4.4			238; 9.4
Q	ø 9; ø 0.35			
R	ø 7; ø 0.28			ø 9; ø 0.35
S	167; 6.6			206; 8.1
T	30; 1.2			17; 0.67

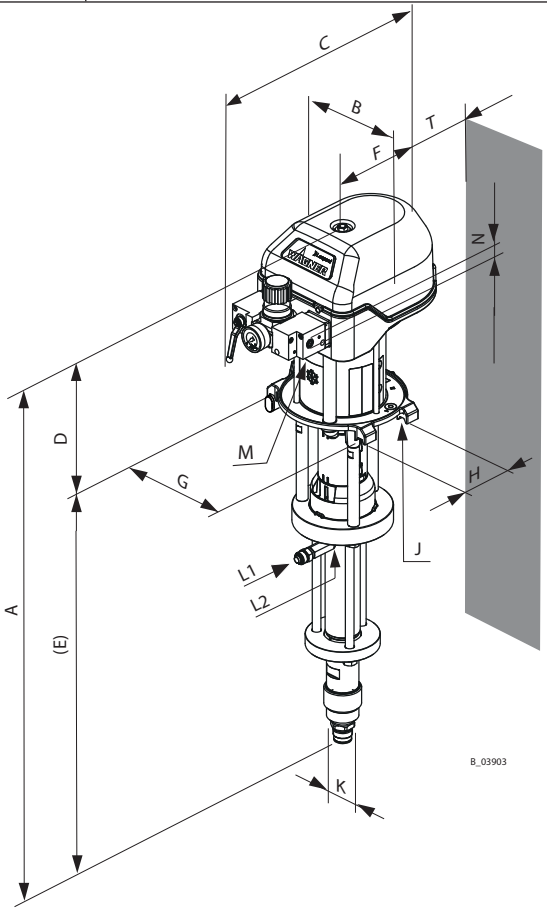

Jaguar wall mount

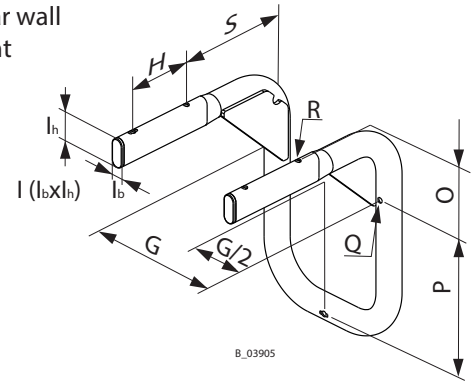

Wall mount for Leopard

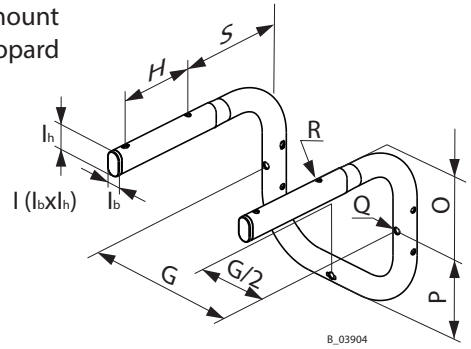

5.5.4 VOLUME FLOW

Wagner AL nozzles **Volume flow* in l/min**

Ø inch	Ø mm	**Spray angle**	**at** 7 MPa 70 bar 1015 psi	**at** 10 MPa 100 bar 1450 psi	**at** 15 MPa 150 bar 2175 psi	**at** 20 MPa 200 bar 2900 psi	Maximum ranges for continuous operation at 40 DS/min
0.007	0.18	40°	0.17	0.20	0.21	0.22	
0.009	0.23	20-30-40-50-60°	0.21	0.25	0.31	0.36	
0.011	0.28	10-20-30-40-50-60°	0.30	0.35	0.43	0.50	
0.013	0.33	10-20-30-40-50-60-80°	0.45	0.53	0.62	0.68	
0.015	0.38	10-20-30-40-50-60-80°	0.58	0.67	0.81	0.91	
0.017	0.43	20-30-40-50-60-70°	0.73	0.79	1.06	1.23	Wildcat 18-40
0.019	0.48	20-30-40-50-60-70-80°	0.93	1.09	1.37	1.47	Puma 28-40
0.021	0.53	20-40-50-60-80°	1.14	1.36	1.69	1.78	Wildcat 10-70
0.023	0.58	20-40-50-60-70-80°	1.37	1.59	2.01	2.24	Puma 15-70
0.025	0.64	20-40-50-60-80°	1.62	1.91	2.40	2.60	Leopard 35-70
0.027	0.69	20-40-50-60-80°	1.83	2.13	2.68	3.12	
0.029	0.75	60°	2.19	2.51	3.17	3.63	
0.031	0.79	20-40-50-60°	2.40	2.77	3.49	4.00	Puma 21-110
							Leopard 48-110
0.035	0.90	20-40-50-60°	3.22	3.74	4.69	5.14	Puma 15-150
							Leopard 35-150
							Jaguar 75-150
0.043	1.10	20-50°	5.07	6.04	7.46	7.84	
0.052	1.30	50°	5.12	6.10	7.52	8.06	

* Volume flow refers to water.

5.5.5 PERFORMANCE DIAGRAMS

Example diagram

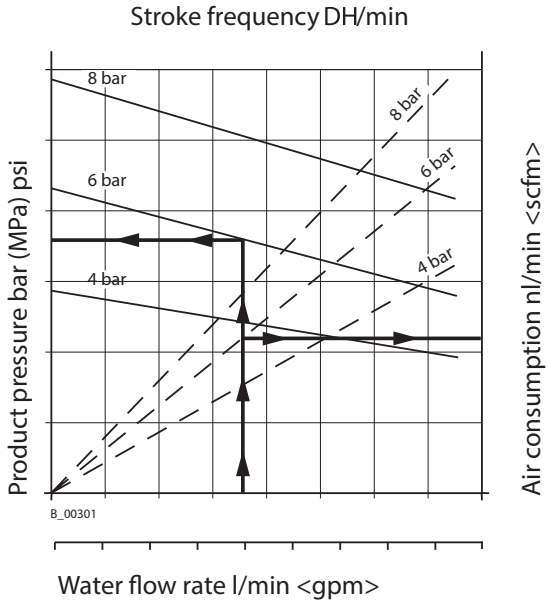

WILDCAT 18-40

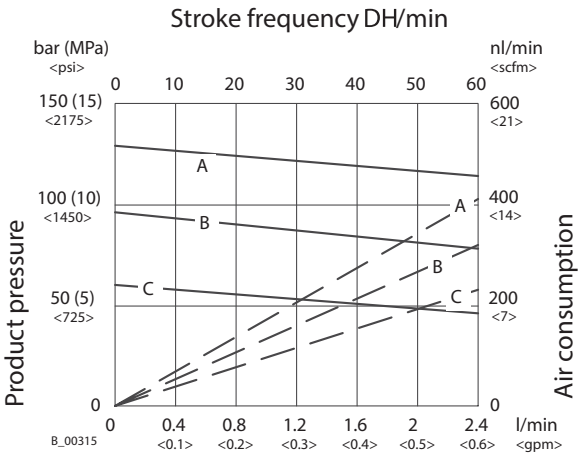

A = 8 bar (0.8 MPa; 116 psi) air pressure
B = 6 bar; 0.6 MPa; 87 psi air pressure
C = 4 bar; 0.4 MPa; 58 psi air pressure

WILDCAT 10-70

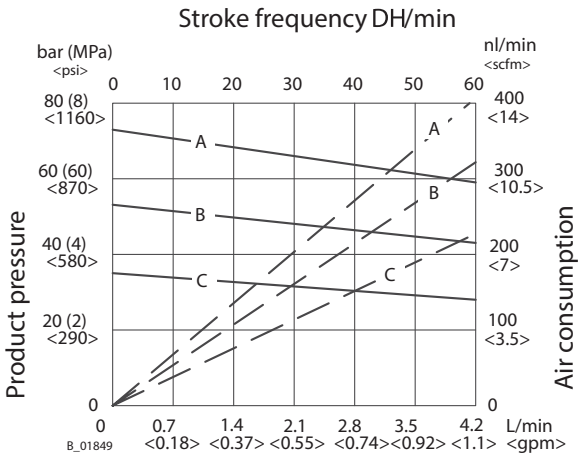

A = 8 bar (0.8 MPa; 116 psi) air pressure
B = 6 bar; 0.6 MPa; 87 psi air pressure
C = 4 bar; 0.4 MPa; 58 psi air pressure

PUMA 28-40

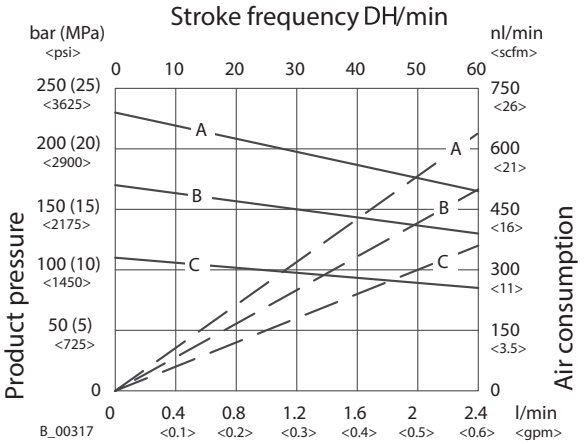

Water flow rate

A = 8 bar (0.8 MPa; 116 psi) air pressure
B = 6 bar; 0.6 MPa; 87 psi air pressure
C = 4 bar; 0.4 MPa; 58 psi air pressure

PUMA 15-70

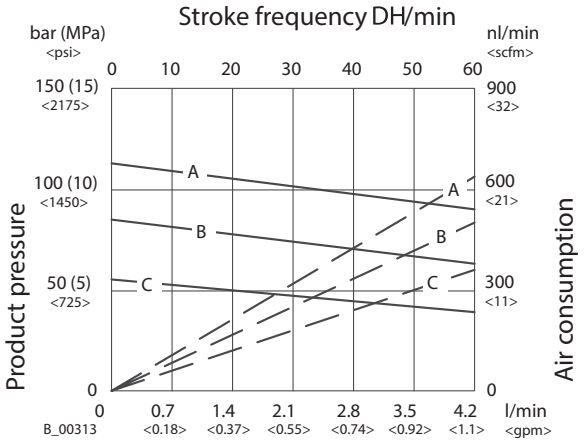

Water flow rate

A = 8 bar (0.8 MPa; 116 psi) air pressure
B = 6 bar; 0.6 MPa; 87 psi air pressure
C = 4 bar; 0.4 MPa; 58 psi air pressure

PUMA 21-110

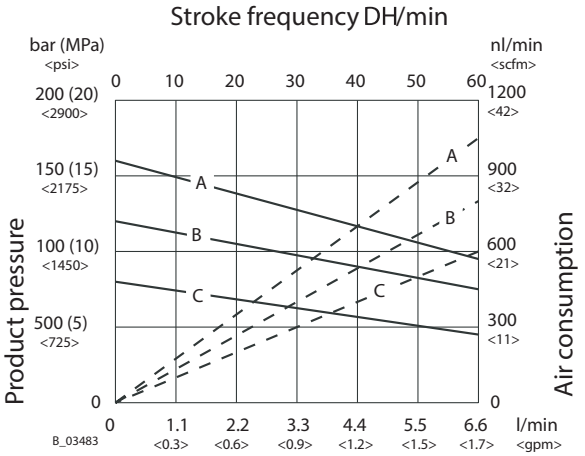

Water flow rate

A = 8 bar (0.8 MPa; 116 psi) air pressure
B = 6 bar; 0.6 MPa; 87 psi air pressure
C = 4 bar; 0.4 MPa; 58 psi air pressure

PUMA 15-150

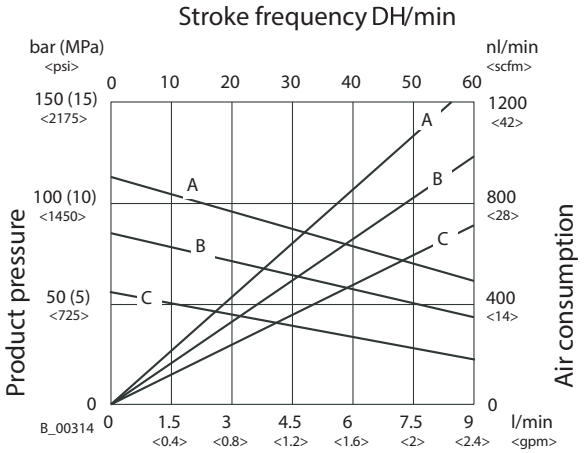

Water flow rate

A = 8 bar (0.8 MPa; 116 psi) air pressure
B = 6 bar; 0.6 MPa; 87 psi air pressure
C = 4 bar; 0.4 MPa; 58 psi air pressure

LEOPARD 35-70

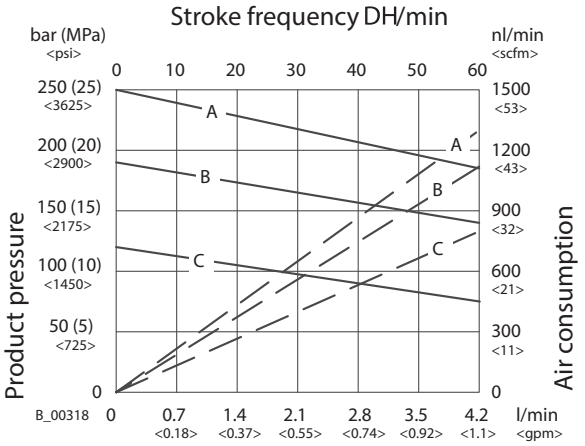

Water flow rate

A = 7.1 bar (0.71 MPa; 103 psi) air pressure
B = 6 bar; 0.6 MPa; 87 psi air pressure
C = 4 bar; 0.4 MPa; 58 psi air pressure

LEOPARD 48-110

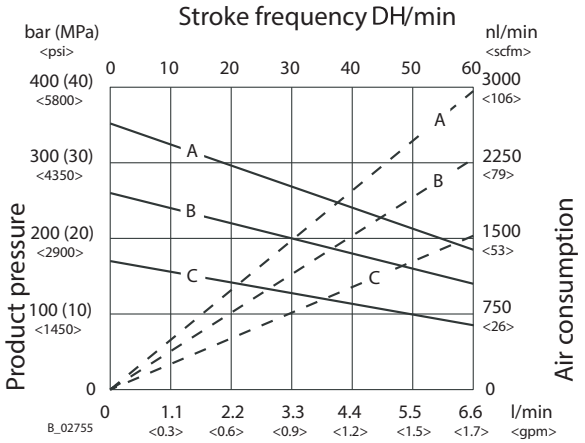

Water flow rate

A = 8 bar (0.8 MPa; 116 psi) air pressure
B = 6 bar; 0.6 MPa; 87 psi air pressure
C = 4 bar; 0.4 MPa; 58 psi air pressure

LEOPARD 35-150

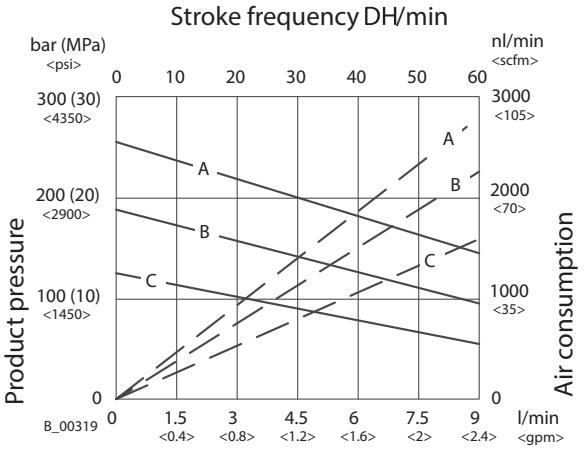

Water flow rate

A = 7.7 bar (0.77 MPa; 112 psi) air pressure
B = 6 bar; 0.6 MPa; 87 psi air pressure
C = 4 bar; 0.4 MPa; 58 psi air pressure

JAGUAR 75-150

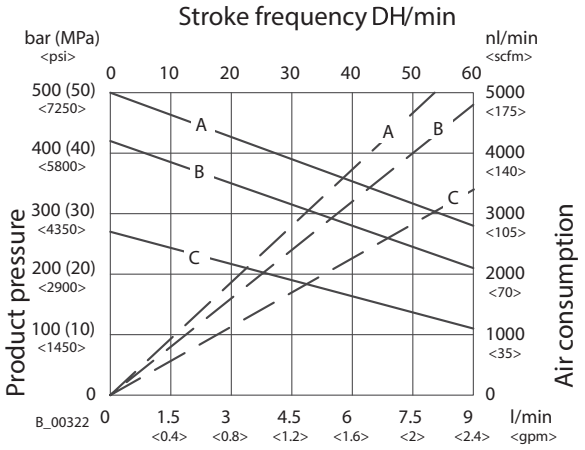

Water flow rate

A = 7.1 bar (0.71 MPa; 103 psi) air pressure
B = 6 bar; 0.6 MPa; 87 psi air pressure
C = 4 bar; 0.4 MPa; 58 psi air pressure

5.6 PRESSURE REGULATOR UNIT

1 Pressure regulator
2 Ball Valve
3 Pressure gauge
4 Compressed air Inlet
5 AirCoat regulator (option)

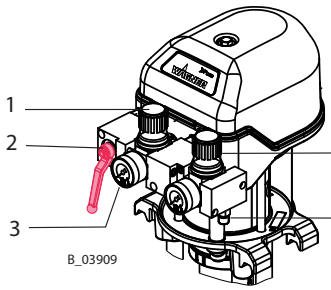

Pneumatic pump
Puma 28-40 AirCoat

Positions of the ball valve

1 Closed: working pressure in the air motor will be relieved (control pressure is still present).
2 Closed: the air motor may still be under pressure.
3 Open: working position

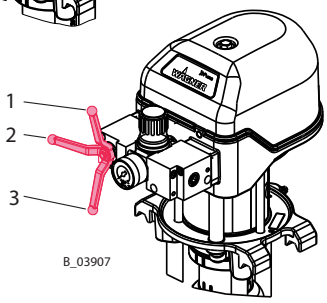

Pneumatic pump
Puma 28-40 Airless

5.7 PRODUCT FILTER AND RETURN FLOW

So that the complete pressure relief of the pump can be performed (see Chapter 7.5), a high-pressure filter with a return flow or a relief combination, is mandatory.

5.7.1 HIGH-PRESSURE FILTER (OPTION)

To ensure problem-free operation it is recommended that a WAGNER high-pressure filter be used. These have been developed especially for WAGNER pneumatic pumps. The filter inserts can be exchanged depending on the product to be used. The high-pressure filter corresponding to the device can be found in the "Accessories" chapter; the compatible filter inserts can be found in the "Spare parts" chapter.

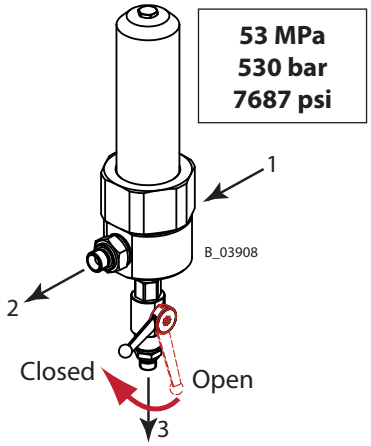

1 Fluid section connection
2 Material outlet
3 Return line

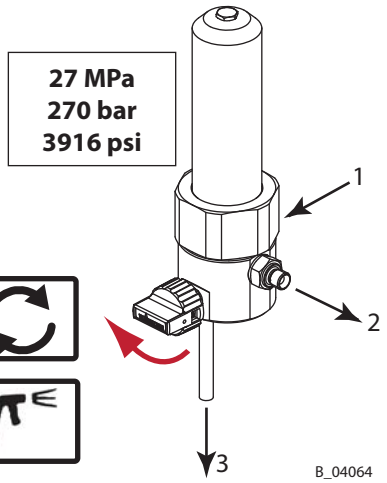

Preferred filter installation position

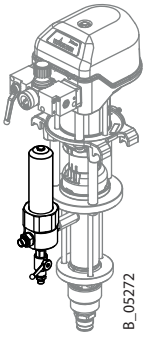

5.7.2 RELIEF COMBINATION AND INLINE FILTER UP TO 270 BAR (OPTION)

Instead of the standard high-pressure filter the lower-cost filter-relief combination and an inline filter can be used if only a small volume of product will be processed.
Application: in pumps with a maximum product pressure of 270 bar; 3916 psi.

You will find the filter-relief combination and the suitable inline filter in the accessories list.

1 Fluid section connection
2 Relief combination
3 Return line
4 Inline filter
5 Material outlet

27 MPa; 270 bar; 3916 psi

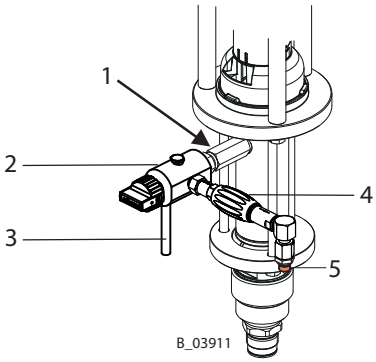

5.8 STROKE COUNT (OPTION)

Each air motor has a 1/8" air connection with which the air pressure in the lower air motor chamber can be measured. This signal can be used for counting the strokes in an external control, for example.
The pressure signal corresponds to the set working air pressure and is available during the complete upwards stroke of the pump. If both of the signal flanks are evaluated, the upper and lower reversal point can be determined. A 4/2-mm; 0.16/0.08-inch air hose is used as an air signal line.

Pos	Order No.	Designation
1	9998675	Threaded plug
2	9999066	Male stud elbow
3	9982072	Air hose (per meter)
4	9943049	Pneumatic pre-selection counter

Pneumatic pumps: Wildcat, Puma and Leopard

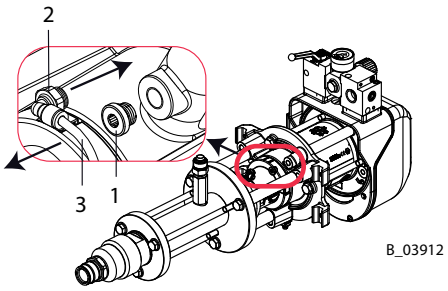

Pneumatic pumps: Jaguar

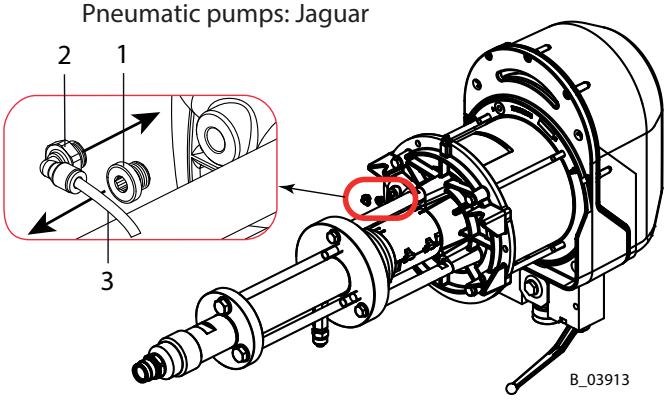

5.9 FEED PUMP (OPTION)

A feed pump can be used with high-viscosity products or longer feed lines.

Dimensioning of the feed pump

→ The IceBreaker piston pumps pump the working material to the product output with up and down strokes but only draw in new product on the up stroke. The feed pump therefore has to pump twice the volumetric flow.

Main pump protection

→ The maximum product pressure at the pump inlet of the IceBreaker pump may not be exceeded.

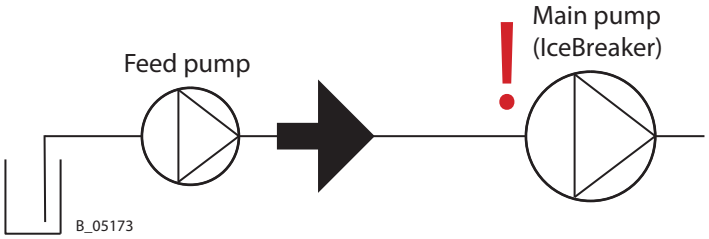

Protection of feed pump

→ If the maximum pressure of the feed pump is lower than the maximum pressure of the main pump, this could be exceeded if the main pump malfunctions. The feed pump and connection line must therefore be protected from excessive overpressure. An overpressure valve must then be installed between the feed pump and main pump.

→ Observe the flow direction during installation.

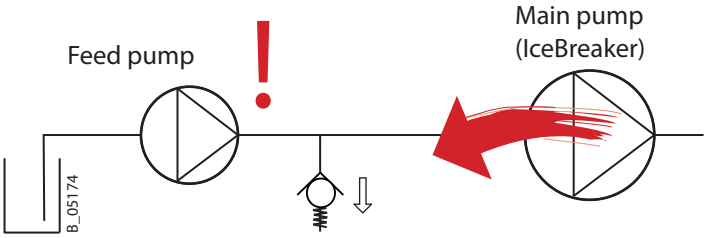

Pressure relief valve

→ The pressure-relief valve must be cleaned regularly and after each activation: Flush with solvent.

Installation sets and compatible feed pumps

→ See assembly manual "Feed pump installation sets", Order No. 2357584.

6 ASSEMBLY AND COMMISSIONING

6.1 TRAINING ASSEMBLY/COMMISSIONING STAFF

→ The assembly and commissioning staff must have the technical skills to safely undertake commissioning.
→ When assembling, commissioning and carrying out all work, read and follow the operating manuals and safety regulations for the additionally required system components.

A skilled person must check to ensure that the device is in a reliable state after it is installed and before commissioning.

6.2 STORAGE AND INSTALLATION CONDITIONS

Until the point of assembly, the device must be stored in a dry location, free from vibrations and with a minimum of dust. The device must be stored in closed rooms. For specifications on temperatures and relative humidity, see Technical Data.

Long-term storage: Thoroughly clean the pump, if a long-term decommissioning is planned. See Chapter "Cleaning". For recommissioning, proceed according to following chapters.

6.3 TRANSPORTATION

Only the pump without trolleys may be lifted by the ring nut or lifting eye bolt (see accessories) and transported short distances.

Wildcat, Puma and Leopard: The pump can be moved on a trolley (4"/6" trolley) or manually without lifting equipment or a crane.

Jaguar: The pump must be moved on a trolley (heavy-duty PC trolley) or with lifting equipment or a crane.

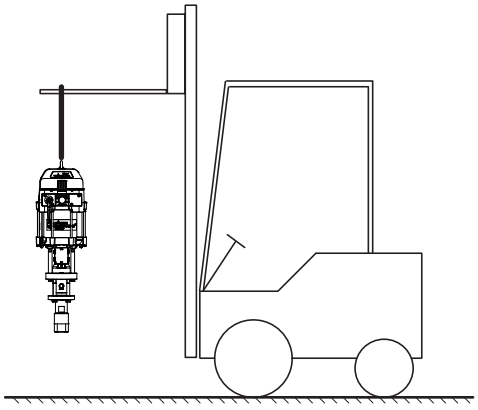
B_04065

⚠ WARNING

Inclined ground!
Risk of accidents if the device rolls away/falls.

→ Position the trolley with the piston pump horizontally.
→ If the surface is inclined, position the feet of the trolley towards the gradient.
→ Secure the trolley.

6.4 ASSEMBLY AND INSTALLATION

This pump can be used as part of a spraying system for Airless or AirCoat applications. The individual components are shown in the accessories, or can be arranged with a spraypack configurator. The nozzles must be selected according to the gun operating manual.

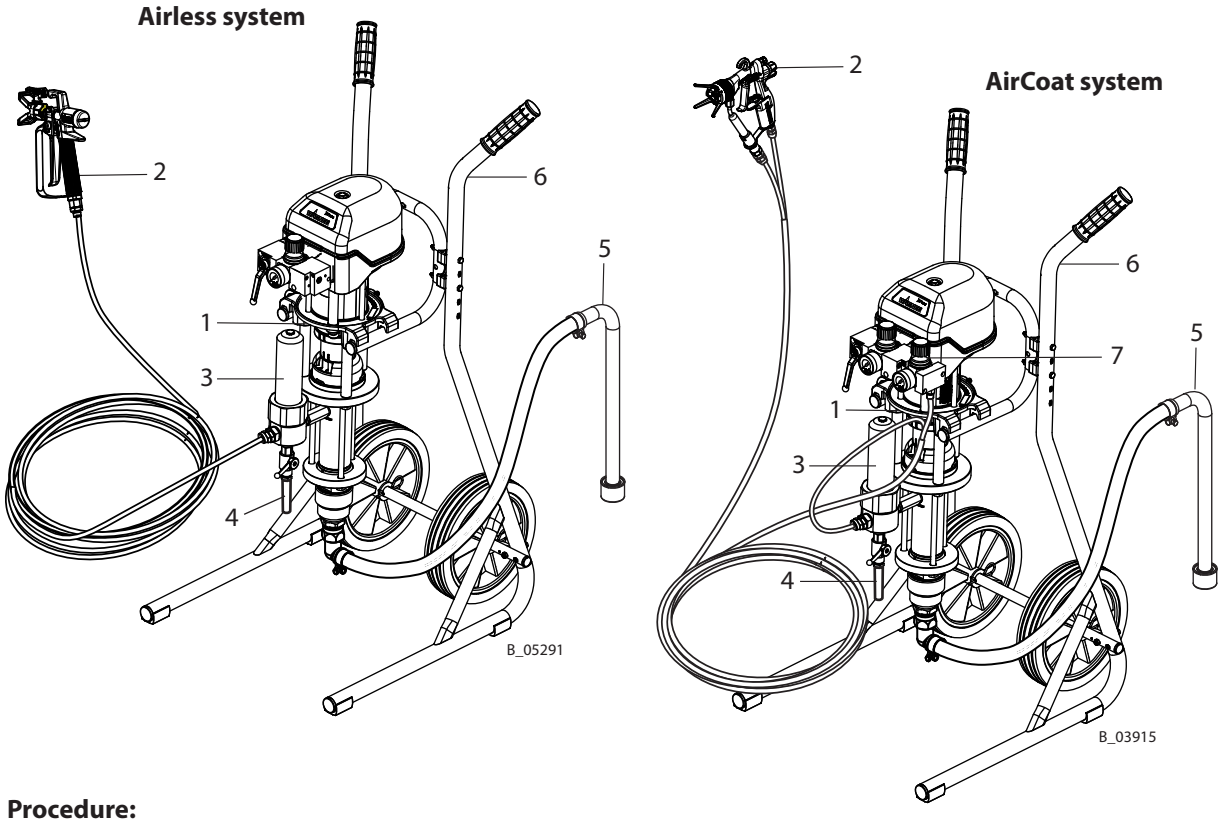

Procedure:

a) Mount pump (1) on frame, trolley (6) or wall mount.
b) Mount the AirCoat regulator (7) with an AirCoat system.
c) Mount high-pressure filter (3) or filter relief combination and inline filter.
d) Mount suction system (5).
e) Mount return tube (4) or return hose.
f) Connect high-pressure hose and gun (2) as laid down in the operating manual for the gun.

6.4.1 VENTILATION OF THE SPRAY BOOTH

Observe the safety instructions in Chapter 4.1.3.

→ Operate the device in a spray booth approved for the working materials.
-or-
→ Operate the device on an appropriate spraying wall with the ventilation (extraction) switched on.
→ Observe national and local regulations for the outgoing air speed.

6.5 GROUNDING

⚠ WARNING

Discharge of electrostatically charged components in atmospheres containing solvents!
Explosion hazard from electrostatic sparks.

→ Clean the piston pump only with a damp cloth.
→ Ground all device components.
→ Ground the work pieces to be coated.

⚠ WARNING

Heavy paint mist if grounding is insufficient!
Danger of poisoning.
Insufficient paint application quality.

→ Ground all device components.
→ Ground the work pieces to be coated.

Grounding scheme (example)

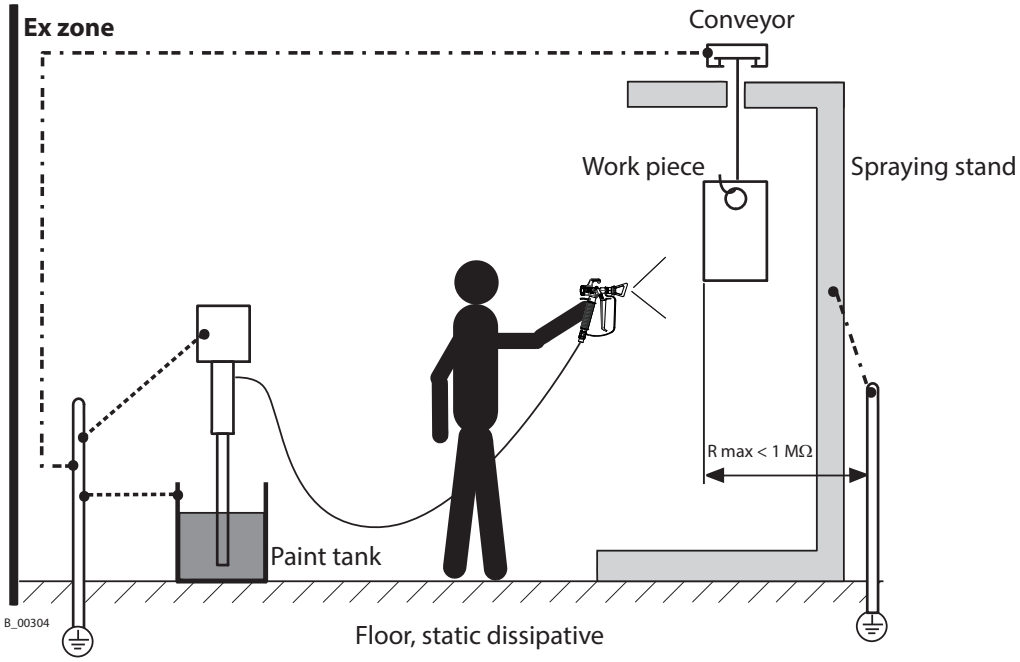

Cable cross sections

Pump	4 mm²; AWG 12	Conveyor	16 mm²; AWG 6
Product tank	6 mm²; AWG10	Booth	16 mm²; AWG 6
		Spraying stand	16 mm²; AWG 6

Safe operation of the IceBreaker pump is only guaranteed with a ground connection.

Connect all ground cables using a short and direct route.

Procedure:

1. Ground the pump, connect the grounding cable to potential equalization on-site.
2. Ground the product tank.
3. Ground the other parts of the system to an on-site grounding connection. 16 mm²; AWG 6

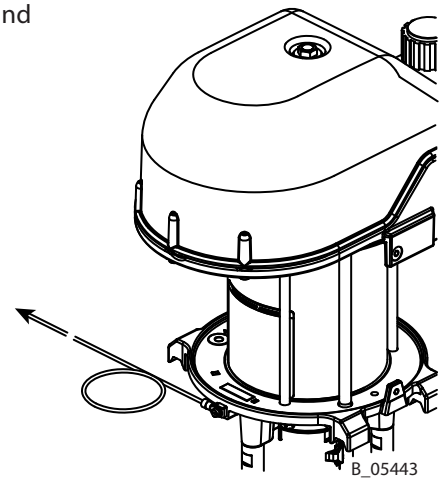

Ex zone

All devices and equipment must be suitable for use in potentially explosive areas.

Tank

→ All paints, flushing agents and waste containers have to be electrically conductive.
→ All containers must be grounded.

6.6 COMMISSIONING

→ Observe all safety regulations in accordance with Chapter 4 and Chapter 7.2.

→ Emergency stop, see Chapter 7.3.

Preparation

Before every start-up, the following points should be observed as laid down in the operating manual:

- Secure gun with safety clip.
- Check the permissible pressures.
- Check all connections for leaks.
- Check hoses for damage in accordance with Chapter 8.2.9.

Fill the pump with flushing agent

The devices are tested during manufacturing with emulsifying oil, pure oil or solvent. Possible residues must be flushed out of the circuits with a solvent (flushing agent) before commissioning.

- Fill the separating agent in accordance with Chapter 8.2.4.
- Fill the empty device with flushing agent in accordance with Chapter 8.2.7.

Pressure tightness test

- Gradually increase the pressure in pump with the pressure regulator until maximum pressure is reached. Maintain the pressure for 3 minutes and check all connection points for leaks.
- Depressurization in accordance with Chapter 7.5.

Filling with working material

- In accordance with Chapter 7.6.1.

7 OPERATION

7.1 TRAINING THE OPERATING STAFF

→ The operating staff must be qualified and fit to operate the entire system.
→ The operating staff must be familiar with the potential risks associated with improper behavior as well as the necessary protective devices and measures.
→ Before work commences, the operating staff must receive appropriate system training.

7.2 SAFETY INSTRUCTIONS

Before carrying out any work, the following points must be observed in accordance with the operating manual:
→ Observe all safety regulations in accordance with Chapter 4.
→ Carry out commissioning in accordance with Chapter 6.6.

⚠ WARNING

Incorrect operation!
Risk of injury and damage to the device.

→ If contact with lacquers or cleaning agents causes skin irritation, appropriate precautionary measures must be taken, e.g., wearing protective clothing.
→ The footwear worn by operating staff must comply with EN ISO 20344. The measured insulation resistance must not exceed 100 megohms.
→ The protective clothing, including gloves, must comply with EN ISO 1149-5. The measured insulation resistance must not exceed 100 megohms.

⚠ WARNING

Unintentional putting into operation!
Risk of injury

Before any work on the device, in the event of work interruptions and malfunctions:
→ Relieve the pressure from the spray gun and unit.
→ Secure the spray gun against actuation.
→ Switch off the energy/compressed air supply.
→ Disconnect the control unit form the network.
→ In the event of functional faults: remedy the fault as described in the "Troubleshooting" chapter.

⚠ WARNING

Gas mixtures can explode if there is an incompletely filled pump!
Danger to life from flying parts.

→ Ensure that the pump and suction system are always completely filled with flushing agent or working material.
→ Do not spray the device empty after cleaning.

7.2.1 GENERAL RULES FOR MAKING ADJUSTMENTS TO THE SPRAY GUN

→ Observe spray gun operating manual.

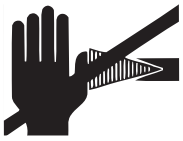

⚠ WARNING

High pressure spray jet!
Danger to life from injecting paint or solvent.

→ Never reach into the spray jet.
→ Never point the spray gun at people.
→ Consult a doctor immediately in the event of skin injuries caused by paint or solvent. Inform the doctor about the paint or solvent used.
→ Never seal defective high pressure parts, instead relieve the pressure from them and replace them.
→ Use personal protective equipment (protective clothing, gloves, eyewear and respiratory protection).

7.3 EMERGENCY STOP

In the case of unforeseen occurrences, immediately:

- close ball valve (2);
- open return valve (3).

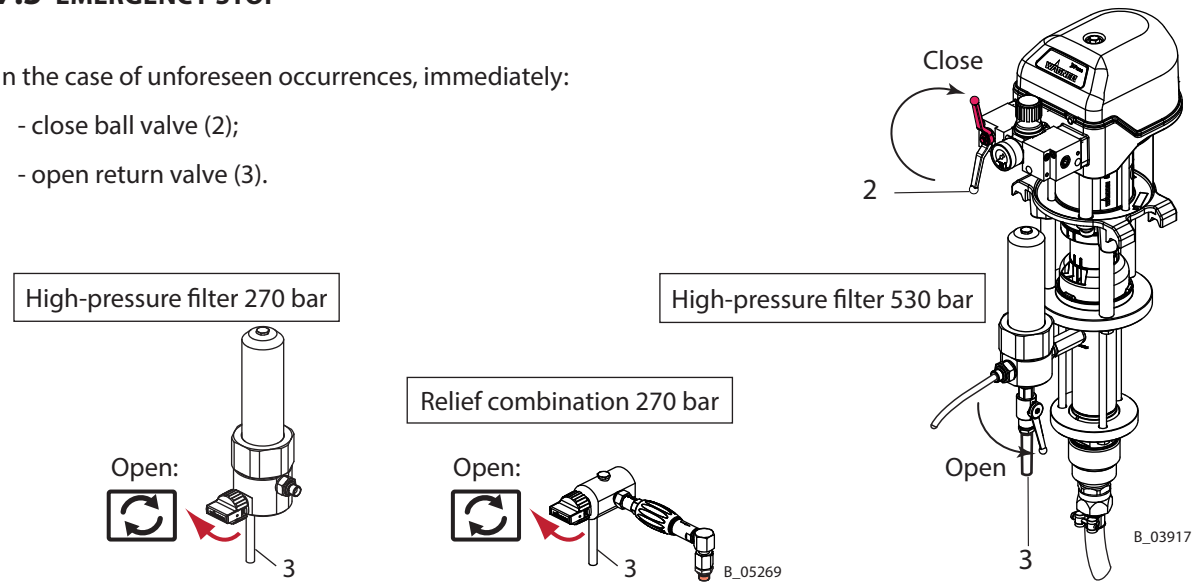

7.4 SPRAYING

1. Visual check: personal safety equipment, grounding and all devices ready to use.
2. Secure the spray gun and place the nozzle in the gun.
3. Set required working pressure on the pressure regulator (1).
4. Slowly open the ball valve (2).
5. Optimize the spraying results as laid down in the gun instructions.
6. Start work process.

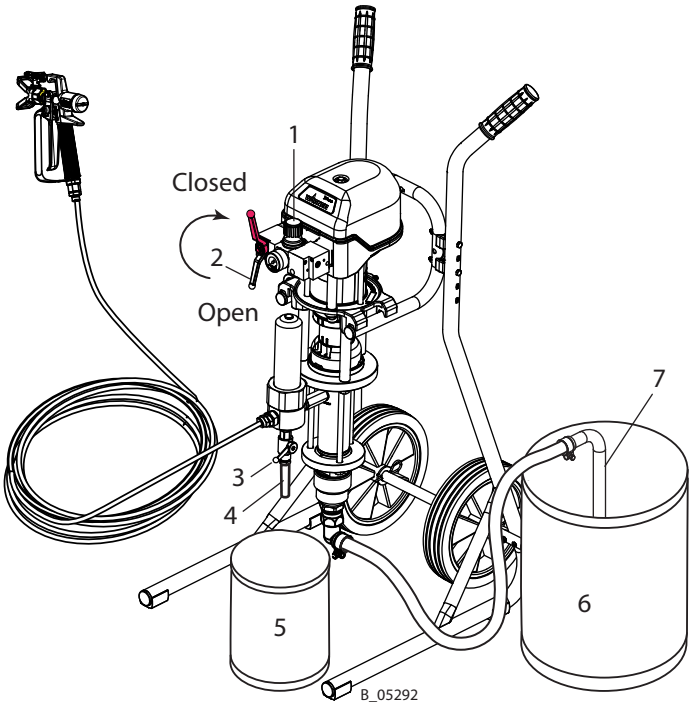

7.5 PRESSURE RELIEF/WORK INTERRUPTION

1. Close the spray gun.
2. Close ball valve (2).
3. Release the system by opening the gun.
   → Attention: If a blocked nozzle is preventing relief, first carry out the additional steps 4 and 5, then clean the nozzle.
4. Close and secure gun.
5. Open and close the return valve (3) slowly to completely depressurize the system.

If the system has been used with 2K products:

NOTICE

Hardened working material in the spraying system when 2K product is processed!
Destruction of pump and injection system.

→ Follow the manufacturer's processing rules, particularly regarding the pot life.
→ Flush thoroughly before the end of the pot life.
→ The pot life is decreased by warmth.

7.6 BASIC FLUSHING

Procedure

1. Visual check: personal safety equipment, grounding and all devices ready to use.
2. Place an empty, grounded collection tank (5) under the return tube (4).
3. Place the suction hose (7) in the grounded tank with flushing agent (6).
4. Adjust the pressure regulator (1) to approx. 0.05 MPa; 0.5 bar; 7.25 psi.

Flush via the return flow valve

5. Open return valve (3).
6. Slowly open the ball valve (2).
7. Adjust the air pressure on the pressure regulator (1) so that the pump runs smoothly.
8. Flush the system until clean flushing agent flows into the tank (5).
9. Close ball valve (2).
10. As soon as there is no pressure remaining in the system, close the return valve (3).

Flush using gun

11. Point the spray gun, without nozzle, into the tank (5) and open it.
12. Slowly open the ball valve (2).
13. Rinse until clean flushing agent flows from the gun.
14. Close ball valve (2).
15. As soon as there is no pressure in the system, close the gun.
16. Secure the gun.

17. Dispose of the contents of the tank (5) according to the local regulations.

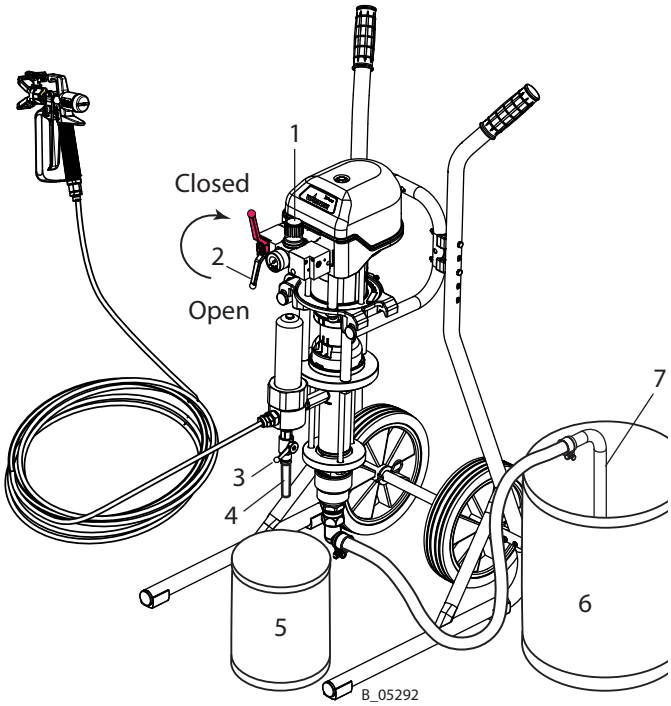

Flush regularly

Regular flushing, cleaning and maintenance ensures the pumps' high pumping and suction capacity.

Hardener pumps in 2K systems

Do not flush hardener pumps with water, rather only using suitable flushing agents (solvents).

7.6.1 FILLING WITH WORKING MATERIAL

After basic flushing, the system can be filled with working material.
Proceed according to Chapter 7.6, but use working material instead of flushing agent.

8 CLEANING AND MAINTENANCE

8.1 CLEANING

8.1.1 CLEANING STAFF

Cleaning work should be undertaken regularly and carefully by qualified and trained staff. They should be informed of specific hazards during their training.

The following hazards may arise during cleaning work:

- Health hazard from inhaling solvent vapors
- Use of unsuitable cleaning tools and aids

8.1.2 SAFETY INSTRUCTIONS

→ Clean the piston pump only with a damp cloth.
→ Observe safety instructions in Chapter 4.

DANGER

Incorrect maintenance/repair!
Danger to life and equipment damage.

→ Only a WAGNER service center or a suitably trained person may carry out repairs and replace parts.
→ Only repair and replace parts that are listed in the Chapter "Spare parts" and that are assigned to the unit.
→ Before all work on the device and in the event of work interruptions:
- Relieve pressure from spray guns and devices.
- Secure spray guns against actuation.
- Switch off the energy/compressed air supply.
- Disconnect the control unit from the mains.
→ Observe the operating manual and service manuals at all times when carrying out work.

8.1.3 DECOMMISSIONING AND CLEANING

The device should be cleaned for maintenance purposes. Ensure that no remaining product dries on and sticks to the device.

1. Carry out work interruption → Chapter 7.5.
2. Carry out basic flushing → in accordance with Chapter 7.6.
3. Empty the pump in a controlled manner → in accordance with Chapter 8.2.6.
4. Maintain the gun according to the operating manual.
5. Clean and check the suction system and the suction filter.
6. When using a material filter, check filter insert and filter housing and clean or replace them. → Chapter 8.2.8.
7. Clean the outside of the system.

⚠ WARNING

Brittle filter pressure regulator!
The tank on the filter pressure regulator becomes brittle through contact with solvents and can burst.
Flying parts can cause injury.

→ Do not clean the tank on the filter pressure regulator with solvents.

8. Fully assemble the system.
9. Check fill level of the separating agent → Chapter 8.2.4.
10. Fill the system with flushing agent in accordance with Chapter 8.2.7.

⚠ WARNING

Gas mixtures can explode if there is an incompletely filled pump!
Danger to life from flying parts.
Ignition of potentially explosive surrounding atmosphere.

→ Ensure that the pump and suction system are always completely filled with flushing agent or working material.
→ Do not spray the device empty after cleaning.

8.1.4 LONG-TERM STORAGE

When storing the device for longer periods of time, it is necessary to thoroughly clean it and protect it from corrosion. Replace the water or solvent in the product pump with a suitable preservative, fill separating agent cup with separating agent.

Procedure:

1. Carry out points 1 to 9 of Chapter 8.1.3 "Decommission and clean".
2. Fill the system with preservative in accordance with Chapter 8.2.7.
3. Empty the pump in a controlled manner in accordance with Chapter 8.2.6 and seal the openings.

8.2 MAINTENANCE

8.2.1 MAINTENANCE STAFF

Maintenance work should be undertaken regularly and carefully by qualified and trained staff. They should be informed of specific hazards during their training.

The following hazards may arise during maintenance work:
- Health hazard from inhaling solvent vapors
- Use of unsuitable tools and aids

An authorized person must ensure that the device is checked for being in a reliable state after maintenance work is completed.

8.2.2 SAFETY INSTRUCTIONS

→ Observe the safety instructions in Chapter 4 and Chapter 8.1.2.

Prior to maintenance
It should be ensured that the device is in the following state before carrying out any work on it:
- Release pressure from the pump, high-pressure hose and gun.
- The gun should be secured with the safety clip.
- The air supply should be interrupted.

After maintenance
- Commissioning in accordance with Chapter 6.6.

→ In accordance with DGUV regulation 100-500 (BGR 500 Chapter 2.29 and 2.36):
  - The liquid ejection devices should be checked by an expert (e.g., WAGNER service technician) to ensure their safe operational condition as required and at least every 12 months.
  - For shut down devices, the examination can be suspended until the next start-up.

DANGER

Incorrect maintenance/repair!
Danger to life and equipment damage.

→ Repair or replacement of devices or parts of devices are only allowed to be performed outside the hazard area by qualified personnel.

8.2.3 REGULAR MAINTENANCE WORK

1. Check the level of separating agent in the separating agent cup every day, and top up if necessary.
2. Check and clean the high-pressure filter every day or as required (see Chapter 8.2.8.).
3. Every shut down should be carried out as laid down in Chapter 8.1.3!
4. Check hoses, pipes, and couplings every day and replace if necessary.

If the pump has to be emptied for maintenance work, proceed according to Chapter 8.2.6.

The service manual is available in German and English.
For order number see Chapter 1.3.

8.2.4 FILLING SEPARATING AGENT

NOTICE

Piston pump dry run!
High wear/damage to the packings.
Paint or solvent can escape if the seals are dry.

→ Ensure that the separating fluid tank is filled with sufficient separating fluid. Filling level 1 cm; 0.4 inch under the cup edge.

Place the supplied separating agent into the separating agent cup.
Filling level: 1 cm; 0.4 inch under the cup edge.
Separating agent: Order No. 9992504

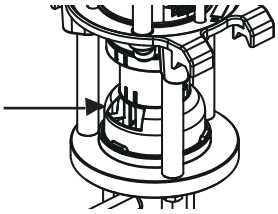
B_03918

Inclination angle of the pump
Maximum permissible inclination of pump for moving, transportation, etc. after filling it with separating agent ± 30°.
The pump must be vertical during operation.

8.2.5 CONDENSATE DRAIN FROM THE AIRCOAT FILTER REGULATOR

→ Frequently drain the condensate that may accumulate in the air filter.
- Make sure the water level in the filter cup never reaches the max. level marked on the cup itself.

8.2.6 EMPTYING THE PUMP

⚠ WARNING

Gas mixtures can explode if there is an incompletely filled pump!
Danger to life from flying parts.
Ignition of potentially explosive surrounding atmosphere.

→ Empty the device slowly and in a controlled manner.
→ Avoid potentially explosive atmosphere in the surroundings.

→ If the pumping product becomes heated, switch off all heaters and let the product cool off.

1. Visual check: personal safety equipment, grounding and all devices ready to use.
2. Carry out basic flushing in accordance with Chapter 7.6.
3. Place grounded collection tank (5) under the return tube (4).
4. Place the suction hose (7) in an empty, grounded tank (6).
5. Close pressure regulator (1) (0 MPa; 0 bar; 0 psi).

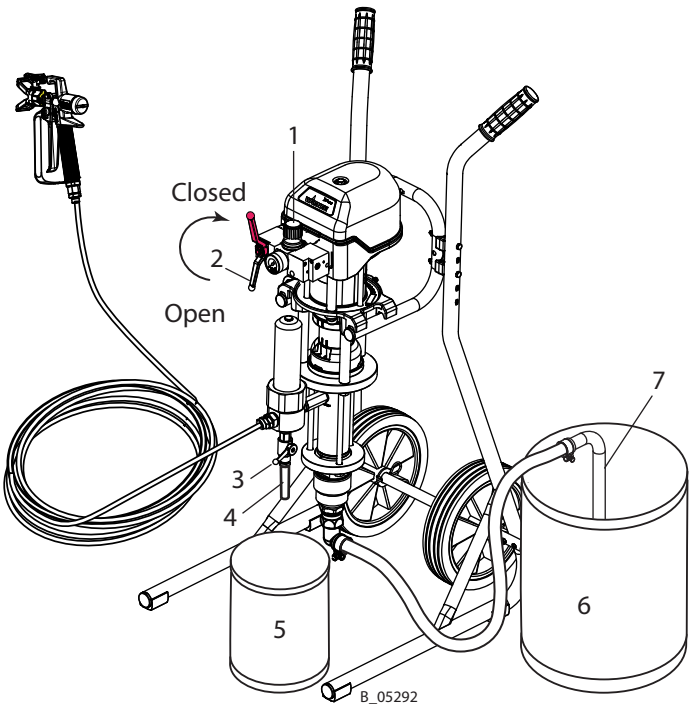

Empty using return line

6. Open return valve (3).
7. Slowly open the ball valve (2).
8. Slowly turn air pressure up on the pressure regulator (1) and only until the pump is running normally (approx. 0.05 MPa; 0.5 bar; 7.25 psi).
9. Be ready for the switch from working material to air. Turn down pressure regulator (1) far enough that the pump is still running normally (approx. 0–0.05 MPa; 0–0.5 bar; 0–7.25 psi).
10. As soon as working material is no longer flowing from the return tube (4), close ball valve (2).
11. Close return valve (3).

Empty up to the gun

12. Point the gun, without nozzle, into tank (5) and open it.
13. Slowly open the ball valve (2). Be ready for the switch from working material to air.
14. As soon as working material is no longer flowing from the return tube, close the ball valve (2).
15. Close and secure gun.
16. Depressurization in accordance with Chapter 7.5.
17. Dispose of the contents of the tank (5) according to the local regulations.

8.2.7 FILLING THE EMPTY PUMP

⚠ WARNING

Gas mixtures can explode if there is an incompletely filled pump!
Danger to life from flying parts.
Ignition of potentially explosive surrounding atmosphere.

→ Empty and fill the device slowly and in a controlled manner.
→ Avoid potentially explosive atmosphere in the surroundings.

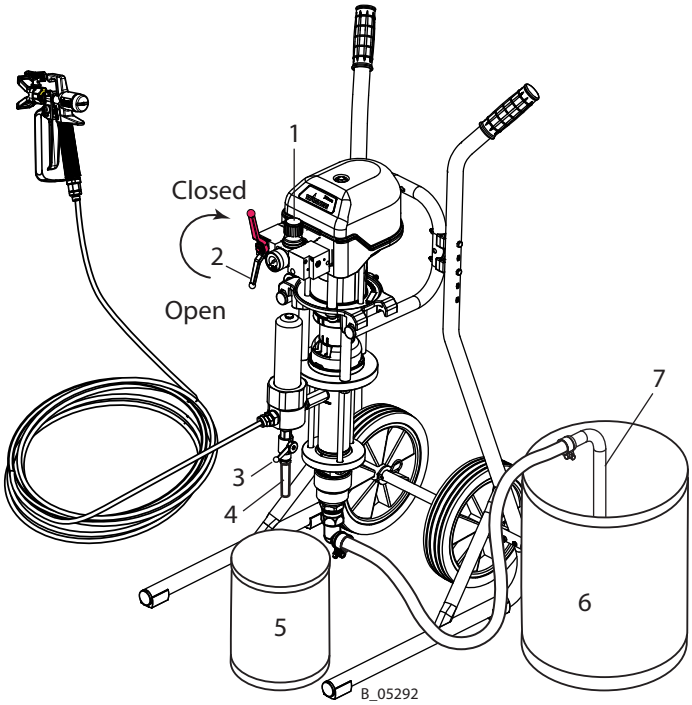

1. Visual check: personal safety equipment, grounding and all devices ready to use.
2. Place grounded collection tank (5) under the return tube (4).
3. Place the suction hose (7) in a grounded tank with working material (6).
   Note:
   If the pump is equipped with a rigid suction system, it should only be dipped in into the working material up to the middle of the inlet housing at the maximum!
4. Close pressure regulator (1) (0 MPa; 0 bar; 0 psi).
5. Open return valve (3).
6. Slowly open the ball valve (2).
7. Slowly turn the air pressure up on the pressure regulator (1) and only until the pump is running normally (approx. . 0–0.05 MPa; 0–0.5 bar; 0–7.25 psi). Be ready to switch from working material to air and prevent back spray.
8. Close ball valve (2) as soon as pure working material starts coming from the return tube (4).
9. Close return valve (3).
10. Point the spray gun, without nozzle, into the tank (5) and open it.
11. Slowly open the ball valve (2). Be ready to switch from working material to air and prevent back spray.
12. As soon as pure working material without air bubbles is flowing, close ball valve (2).
13. Close and secure the spray gun.
14. Depressurization in accordance with Chapter 7.5.
15. Dispose of the contents of the tank (5) according to the local regulations.

8.2.8 CLEANING AND REPLACING THE FILTER

8.2.8.1 STRAIGHT INLINE FILTER (270 BAR)

1. Flush the pump and inline filter in accordance with Chapter 7.6. Flush using the gun so that the flushing agent flows through the inline filter. Maximize the flow (remove the nozzle, open the dosing valve if necessary).
2. Empty the pump in a controlled manner in accordance with Chapter 8.2.6.
3. Place the grounded collection tank under the inline filter.
4. If no swivel joint is mounted, remove the hose.
5. Unscrew the inlet housing (2) and outlet housing (5) with two size 19 wrenches.
6. Remove the filter insert (3).
7. If the inline filter has any leaks, replace the seal* (1).
8. Insert the new filter insert* (3). Note the installation position: Closed end in direction of flow.
9. If necessary, coat the thread with anti-seize paste**.
10. Screw together the inlet housing (2) and outlet housing (5) with two size 19 wrenches.
11. If necessary, screw the hose back on.
12. Fill the pump in accordance with Chapter 8.2.7.

* Order No., see Chapter 13.8.
** Order No., see Chapter 10.2.

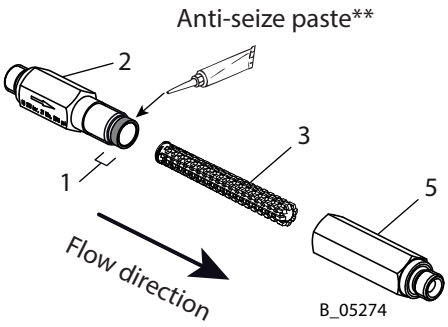

27 MPa; 270 bar; 3916 psi

8.2.8.2 ANGLED INLINE FILTER (270 BAR)

1. Flush the pump and inline filter in accordance with Chapter 7.6. Flush using the gun so that the flushing agent flows through the inline filter. Maximize the flow (remove the nozzle, open the dosing valve if necessary).
2. Empty the pump in a controlled manner in accordance with Chapter 8.2.6.
3. Place the grounded collection tank under the inline filter.
4. Unscrew the filter by turning the handle (4).
5. Remove the filter insert (3).
6. If the inline filter has any leaks, replace the seal* (1).
7. Insert the new filter insert* (3). Note the installation position: Closed end in direction of flow.
8. If necessary, coat the thread with anti-seize paste**.
9. Assemble the turning handle (4), inlet housing (2) and outlet housing (5) and tighten by turning the handle.
10. Fill the pump in accordance with Chapter 8.2.7.

* Order No., see Chapter 13.9.
** Order No., see Chapter 10.2.

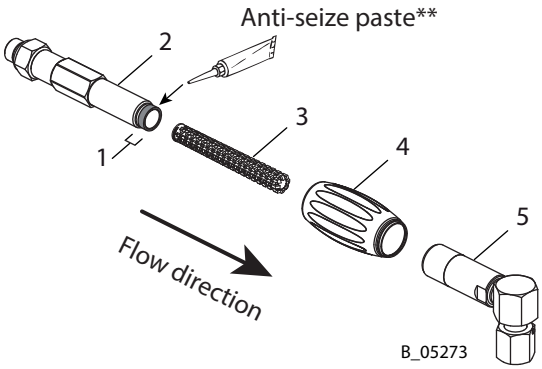

27 MPa; 270 bar; 3916 psi

8.2.8.3 HIGH-PRESSURE FILTER 270 BAR AND 530 BAR

1. Flush the pump and HP filter in accordance with Chapter 7.6, and while doing so:
   - At the preferred filter installation position: Flush via the return flow valve (1). This produces a large flow. As a result, the flushing agent also flows through the upper part of the filter cartridge (11). Pressure regulator approx. 0.15 MPa; 1.5 bar; 22 psi.
   - At the reversed filter installation position: Flush using the gun. This is required in the case of a reversed installation position so that the flushing agent flows through the filter cartridge (11). Maximize the flow (remove the nozzle, open the dosing valve if necessary).
2. Empty the pump in a controlled manner in accordance with Chapter 8.2.6.
3. Place the grounded collection tank under the HP filter.
4. Loosen the union nut (3) (wrench size 70).
5. Unscrew the union nut (3) and lift slightly so that it does not get dirty in the next step.
6. Remove the filter housing (2) with the union nut (3). The cone spring (12) remains in the filter housing (2). If the O-ring (5) is not damaged, it remains on the filter housing (2).
7. Remove the filter cartridge (11) and filter support (10) from the filter housing (2).
8. Clean all parts:
   - Place the filter cartridge (11) and filter support (10) in solvent. Clean using brush.
   - Fill the filter housing (2) approx. 1/3 full with solvent, secure wearing a glove and shake well.
   - Clean the distribution housing (7) using a brush.
9. If necessary, replace the O-ring (5) and/or filter cartridge (11). Order No., see Chapter 13.10 or 13.11.
10. Assemble all parts in reverse order. While doing so:
    - Coat the thread of the distribution housing (7) with anti-seize paste**.
    - Coat the O-ring (5) and pressure ring (21) with Mobilux® EP2**.
    - Observe the installation position of the filter cartridge (11): Push the closed end with the filter identification ahead into the filter housing (2).
    - Make sure that the cone spring (12) is in the filter housing (note the installation position). Press on the cone spring after inserting the filter cartridge (11) and filter support (10); the spring action must be noticeable.
    - Tighten the union nut (3) by hand.
11. Fill the pump in accordance with Chapter 8.2.7.

** Order No., see Chapter 10.2.

Filter installation position	
Preferred	Turned over
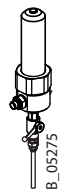	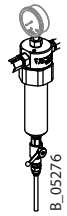

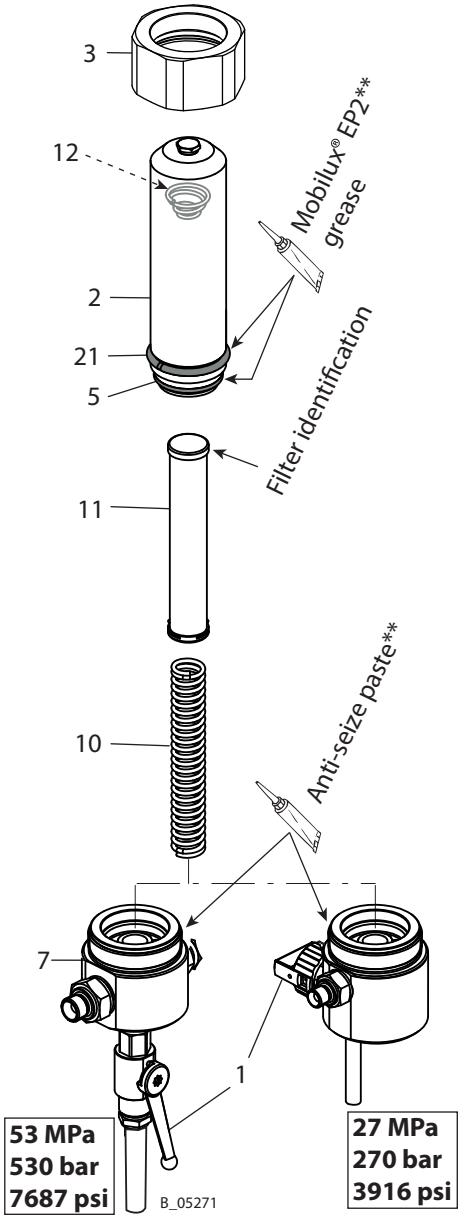

8.2.9 PRODUCT HOSES, TUBES AND COUPLINGS

DANGER

Bursting hose, bursting threaded joints!
Danger to life from injection of product and from flying parts.

→ Ensure that the hose material is chemically resistant to the sprayed products and the used flushing agents.
→ Ensure that the spray gun, threaded joints, and product hose between the device and the spray gun are suitable for the generated pressure.
→ Ensure that the following information can be seen on the hose:
- Manufacturer,
- Permissible operating pressure,
- Date of manufacture.

The service life of the complete hoses between product pressure generator and application device is reduced due to environmental influences even when handled correctly.

→ Check hoses, pipes, and couplings every day and replace if necessary.
→ Before every commissioning, check all connections for leaks.
→ Additionally, the operator must regularly check the complete hoses for wear and tear as well as for damage at intervals that he/she has set. Records of these checks must be kept.
→ Undamaged complete hoses are to be replaced when one of the two following intervals has been exceeded:
  – 6 years from the date of the hose crimping (see fitting embossing).
  – 10 years from the date of the hose imprinting.

Fitting embossing (if present)	**Meaning**
xxx bar	Pressure
yymm	Crimping date (year/month)
XX	Internal code

Hose imprinting	**Meaning**
WAGNER	Name / Manufacturer
yymm	Date of manufacture (year/ month)
xxx bar (xx MPa) e.g., 270 bar (27MPa)	Pressure
XX	Internal code
DNxx (e.g., DN10)	Nominal diameter

9 TROUBLESHOOTING AND RECTIFICATION

Problem	Cause	Remedy
The pump does not work	Air motor does not work or stops.	Open and close ball valve on the pressure regulator unit or briefly disconnect compressed air supply.
	No pressure indication on the pressure gage (air pressure regulator defective).	Disconnect compressed air supply briefly or repair or change pressure regulator.
	Spray nozzle is clogged.	Clean the nozzle according to the instructions.
	Insufficient compressed air supply.	Check compressed air supply.
	Filter insert in spray gun or high-pressure filter is clogged.	Clean the parts and use a suitable working material.
	Fluid section or high-pressure hose are blocked (e.g., 2K product hardened).	Dismount and clean fluid section, replace high pressure hose.
	Grease in spool and sleeve assembly.	Degrease spool and sleeve assembly.
	Pump stops at the stroke end occasionally.	Check detent element (see service manual).
Poor spray pattern	See the gun instructions.	
Irregular operation of product pump: spray jet collapses (pulsation)	Viscosity is too high.	Dilute the working material.
	Spraying pressure is too low.	Increase incoming air pressure Use a smaller nozzle
	Valves are clogged.	Clean product pump, if necessary leave to soak in flushing agent.
	Foreign body in suction valve.	Dismantle suction valve housing, clean and check valve seat
	Diameter of compressed air line too small.	Assemble a larger supply line. → Technical data, Chapter 5.5.3.
	Valves, packings, or pistons are worn out.	Replace the parts.
	Control air filter or work air filter is clogged.	Check filter and clean it if necessary.
Pump is running uniformly, but does not take in any working material	The suction system's union nut is loose; the pump is taking in air.	Tighten union nut.
	Suction filter is clogged.	Clean filter.
	Ball in suction or piston valve is sticking.	Clean with flushing agent (if necessary vent device).
Pump runs when the gun is closed	Packings, valves, or pistons are worn out.	Replace the parts.
The air motor is iced up	There is a lot of condensation water in the air supply.	Install a water separator.

If none of the causes of malfunction mentioned are present, the defect can be remedied by a WAGNER Service Center.

10 REPAIRS

10.1 REPAIR STAFF

Repair work must be carried out carefully by qualified and trained staff. They should be informed of specific hazards during their training. The repairs must be carried out in accordance with the corresponding service manual.

The following hazards may arise during repair work:
- Health hazard from inhaling solvent vapors
- Use of unsuitable tools and aids

A skilled person must ensure that the device is checked for being in a reliable state after repair work is completed.

10.2 MOUNTING MATERIALS

In Chapter 13 the order numbers for device spare parts can be found, as well as for wearing parts such as seals.
→ Use torques, greases and glues in accordance with Chapter 13.

Mounting materials

Order No.	Quantity	Designation	Smaller containers
9992590	1 pc ≙ 50 ml	Loctite® 222	
9992511	1 pc ≙ 50 ml	Loctite® 243	
9992831	1 pc ≙ 50 ml	Loctite® 542	
9998808	1 pc ≙ 18 kg !	Mobilux® EP 2 grease	400 g tube ≙ Order No. 2355418
9992616	1 pc ≙ 1 kg can	Molykote® DX grease	50 g tube ≙ Order No. 2355419
9992609	1 pc ≙ 100 g	Anti-seize paste	
9992816	1 pc ≙ 70 g	Miranit contact adhesive	

Brand notice
The brands specified in this document are property of the respective owners. Loctite®, for example, is a registered brand of Henkel.

11 DISPOSAL

When the equipment must be scrapped, please differentiate the disposal of the waste materials.

The following materials have been used:

Steel	Aluminum	Plastics	Carbide

Consumable products
Consumable products (lacquers, adhesives, flushing and cleaning agents) must be disposed of in accordance with all applicable legal requirements.

12 ACCESSORIES

12.1 WILDCAT AND PUMA PUMPS

12.1.1 MATERIAL OUTLET AND MISCELLANEOUS

		WILDCAT 10-70	WILDCAT 18-40	PUMA 28-40	PUMA 15-70	PUMA 21-110	PUMA 15-150
Pos K	**Designation**	**Order No.**		**Order No.**		**Order No.**	
A	Piston pump PE/TG	2329460	2329456	2329467	2329471	2329517	2329475
A	Piston pump PE/T	2329462	2329458	2329469	2329473	2330614	2329477
1	Separating agent 250 ml; 250 cc	9992504					
2	Grounding cable 3 m; 9.8 ft	236219					
3	Lifting eye bolt	9907133					
4	AirCoat regulator set (for details, see Chapter 13.12)	2328611					
5	AirCoat filter regulator set (for details, see Chapter 13.12.)	2333478					
19	Plug-in fitting with hose connector DN13	9985619					
20	Plug-in fitting with quick-release coupling DN13	9998813					
21	Quick release coupling with hose connector DN 13	9998812					
22	Plug-in fitting with quick-release coupling DN10	9998810					
23	Quick release coupling with hose connector DN 10	9998811					
24	Regulator lock	2334956					
25	Ball valve DN7-PN10-G1/4-R1/4-CB	2335815					
26	Loctite® 542, 50ml; 50cc	9992831					

Material outlet up to 270 bar

27	HP filter DN10-PN270-SSt, complete Details and filter cartridges: Chapter 13.10	2329024
28	Relief combination, complete For details, see Chapter 13.7.	2329023
29	Inline filter DN6-PN270-G1/4"-SSt Details and filter insert: Chapter 13.8	2324558
30	Inline filter HL DN6-PN270-G1/4"-SSt Details and filter insert: Chapter 13.9	2329026
31	Adapter G1/4"-NPS1/4"	2332619

Material outlet up to 530 bar

50	HP filter DN12-PN530-SSt, complete Details and filter cartridges: Chapter 13.11	2329025
52	Adapter G3/8"-NPS1/4"	2332621
53	Adapter G3/8"-NPS 3/8"	2332620
54 ◆	Return tube DN6-G1/4"-100mm-PA	2331752
55 ◆	Circulation hose DN6-PN310-G1/4"-1.8m-PA	2331017
56 ◆	Circulation hose DN6-PN310-G1/4"-2.8m-PA	2331014
57 ◆	Return hose DN6-PN310-G1/4"-PA	2329046

◆ = Wearing parts

WILDCAT
PUMA

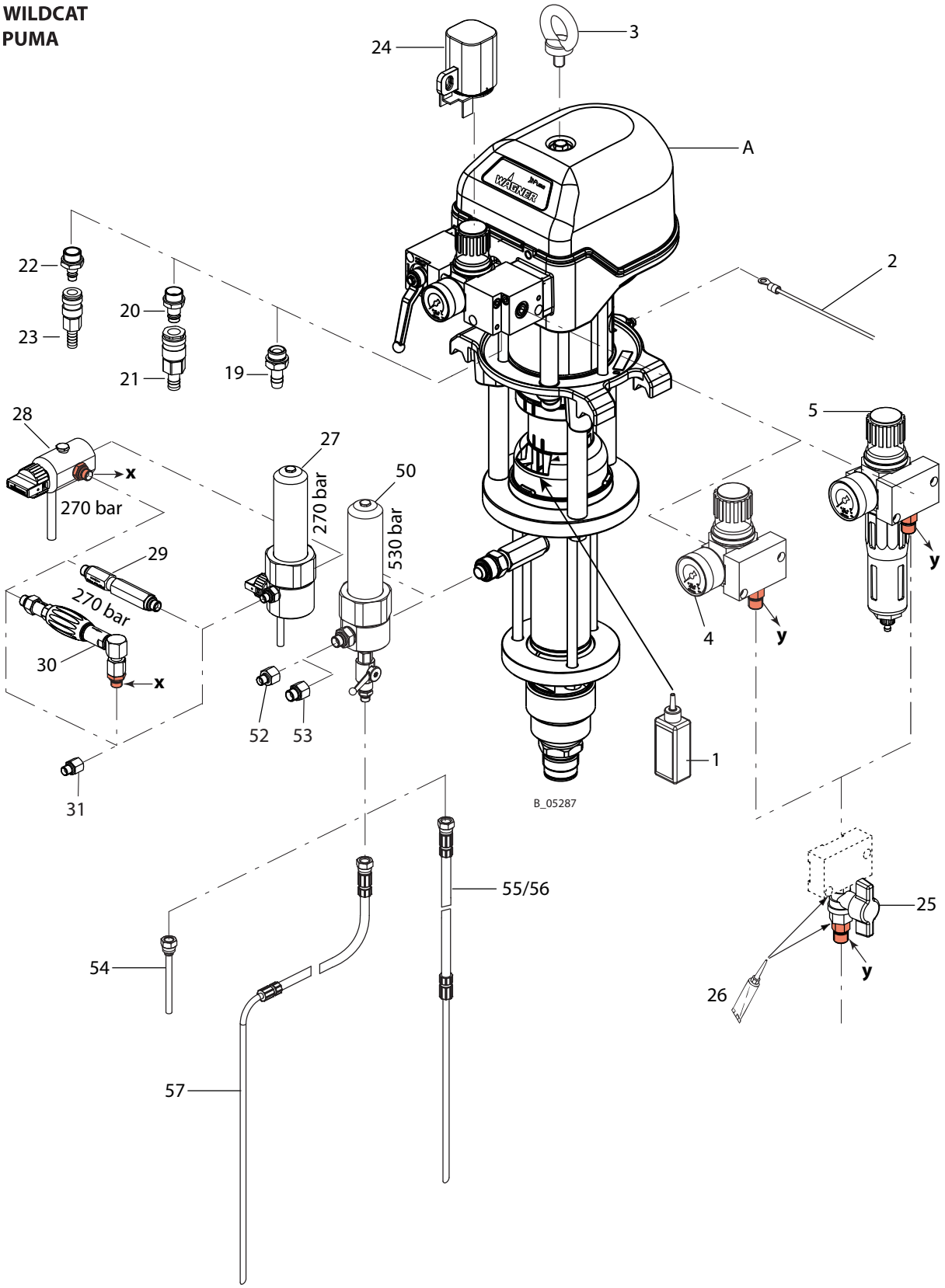

12.1.2 MATERIAL INLET

For trouble-free intake, use hoses which are as short as possible. The maximum hose length is dependent upon the viscosity of the product, the suction height, and the nominal diameter of the hose.

Accessories for product inlet			WILDCAT 10-70	WILDCAT 18-40	PUMA 28-40	PUMA 15-70	PUMA 21-110	PUMA 15-150
Pos	**K**	**Designation**	**Order No.**		**Order No.**		**Order No.**	
A		Piston pump PE/TG	2329460	2329456	2329467	2329471	2329517	2329475
A		Piston pump PE/T	2329462	2329458	2329469	2329473	2330614	2329477
1		Top reservoir set, 5 l for piston pump	2332169				--	--
2		Suction elbow for top reservoir SSt	2323225				--	--
3	◆	Suction hose DN16-SSt, complete	2324110					--
4	◆	Suction hose DN25-SSt, complete	2324116					
5		LP hose fitting DN25-M36-SSt	2325408					
6*	◆	LP hose DN25-PN10-EPDM (per meter)	2323474					
7*	◆	LP hose DN25-PN10-PE (per meter)	2323595					
8		LP hose fitting DN16-M36-SSt	2325390					--
9*	◆	LP hose DN16-PN10-EPDM (per meter)	2323329					--
10*	◆	LP hose DN16-PN10-PE (per meter)	2323597					--
11		Suction tube DN16-SSt, complete	2324158				--	--
12		Suction tube DN25-SSt, complete	2323239					
13		Suction elbow DN25-SSt	2324247					
14		Suction pipe DN25-200L-SSt, complete	2324238					
15		Bung adapter DN25-G2"	2315163					
16		Suction pipe DN25-30L-SSt, complete	2324241					
17	◆	Suction filter DN16-18mesh-SSt	2323396					--
18	◆	Suction filter DN25-18mesh-SSt	2323325					
19		Inlet valve with valve depressor For details, see Chapter 13.6.	2329688	2329689		2329688	--	--

◆ = Wearing parts

* Pos 6, 7, 9, 10: max. 10 bar. If a feed pump (>10 bar) is used, do not use downstream of the feed pump.

WILDCAT
PUMA

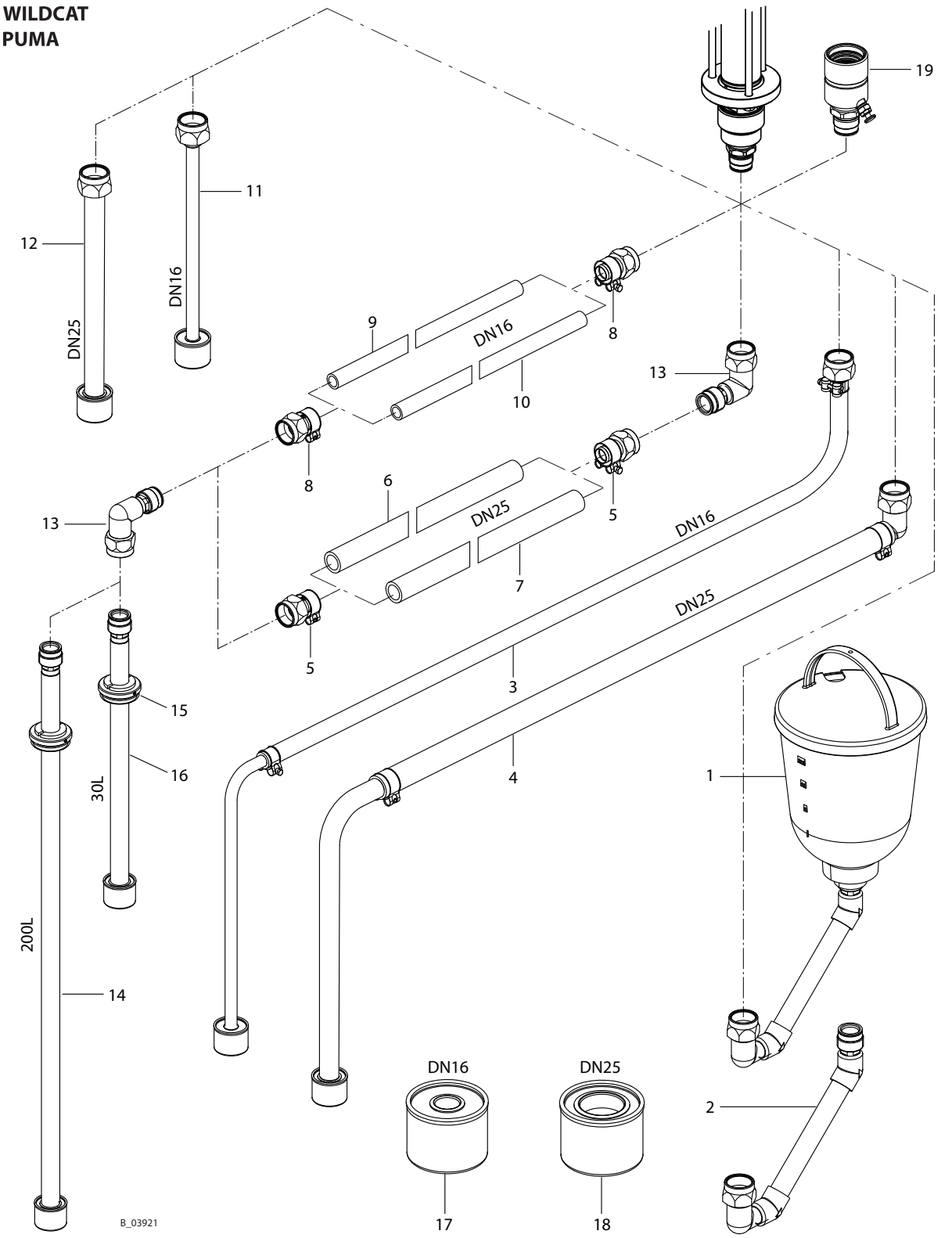

12.1.3 TROLLEY, RACK AND WALL MOUNT ACCESSORIES

Trolley/rack/wall bracket accessories		WILDCAT 10-70	WILDCAT 18-40	PUMA 28-40	PUMA 15-70	PUMA 21-110	PUMA 15-150
Pos K	**Designation**	**Order No.**		**Order No.**		**Order No.**	
A	Piston pump PE/TG	2329460	2329456	2329467	2329471	2329517	2329475
A	Piston pump PE/T	2329462	2329458	2329469	2329473	2330614	2329477
1	Trolley 4", complete For details, see Chapter 13.13.	2325901					
2	Frame 4", complete	2332374					
3	Wall mount 4", complete	2332143					

◆ = Wearing parts

WILDCAT
PUMA

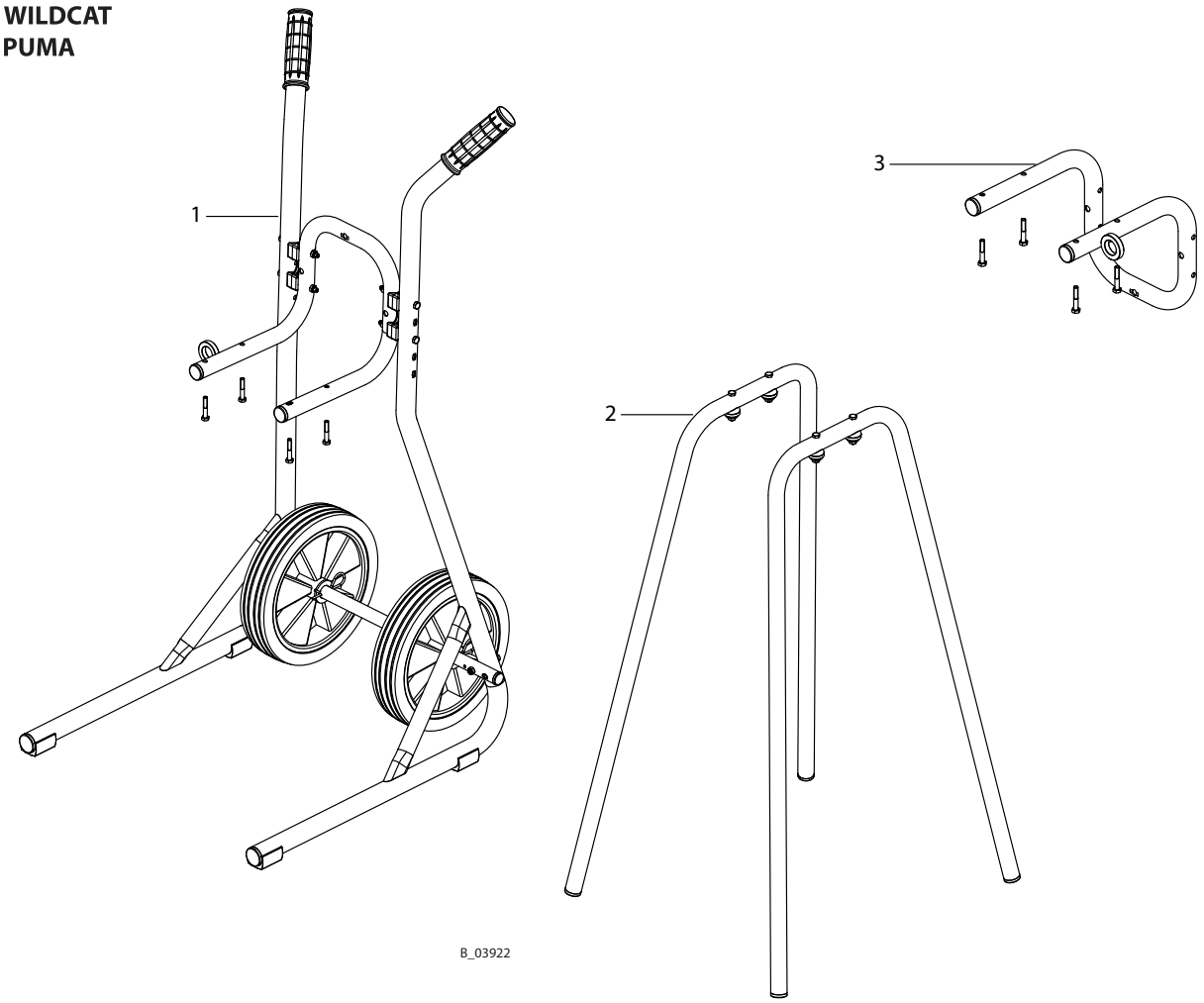

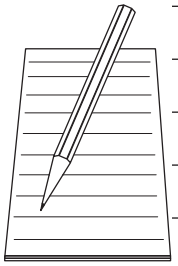

12.2 ACCESSORIES FOR LEOPARD AND JAGUAR PUMPS

12.2.1 MATERIAL OUTLET AND MISCELLANEOUS

			LEOPARD 35-70	LEOPARD 35-150	LEOPARD 48-110	JAGUAR 75-150
Pos	**K**	**Designation**	**Order No.**	**Order No.**	**Order No.**	**Order No.**
A		Piston pump PE/TG	2329479	2329484	2329490	2329501
A		Piston pump PE/T	2329481	2329486	2329493	2329505
A		Piston pump PE/L	--	--	2329495	2329503
1		Separating agent 250 ml; 250 cc	9992504			
2		Grounding cable 3 m; 9.8 ft	236219			
3		Lifting eye bolt	9907133			--
4		AirCoat regulator set (for details, see Chapter 13.12)	2328611			
5		AirCoat filter regulator set (for details, see Chapter 13.12.)	2333478			
19		Plug-in fitting with hose connector DN13	9985619			--
20		Plug-in fitting with quick-release coupling DN13	9998813			--
21		Quick release coupling with hose connector DN 13	9998812			--
22		Outside thread grommet 1"-DN25	--			9985671
23		Sealing ring 1"	--			9974135
24		Regulator lock	2334957			2334958
25		Ball valve DN7-PN10-G1/4-R1/4-CB	2335815			
26		Loctite® 542, 50ml; 50cc	9992831			

Material outlet up to 270 bar

27	27 MPa; 270 bar; 3916 psi	HP filter DN10-PN270-SSt, complete Details and filter cartridges: Chapter 13.10	2329024	--
28		Relief combination, complete For details, see Chapter 13.7.	2329023	--
29		Inline filter DN6-PN270-G1/4"-SSt Details and filter insert: Chapter 13.8	2324558	--
30		Inline filter HL DN6-PN270-G1/4"-SSt Details and filter insert: Chapter 13.9	2329026	--
31		Adapter G1/4"-NPS1/4"	2332619	--

Material outlet up to 530 bar

50	53 MPa; 530 bar; 7687 psi	HP filter DN12 PN530-SSt with stainless steel ball valve Details and filter cartridges: Chapter 13.11	2329025	
51		HP filter DN12 PN530-SSt with carbon steel ball valve Details and filter cartridges: Chapter 13.11	--	2335334
52		Adapter G3/8"-NPS1/4"	2332621	
53		Adapter G3/8"-NPS 3/8"	2332620	
54 ◆		Return tube DN6-G1/4"-100mm-PE	2331752	
55 ◆		Circulation hose DN6-PN310-G1/4"-1.8m-PA	2331017	
56 ◆		Circulation hose DN6-PN310-G1/4"-2.8m-PA	2331014	
57 ◆		Return hose DN6-PN310-G1/4"-PA	2329046	

◆ = Wearing parts

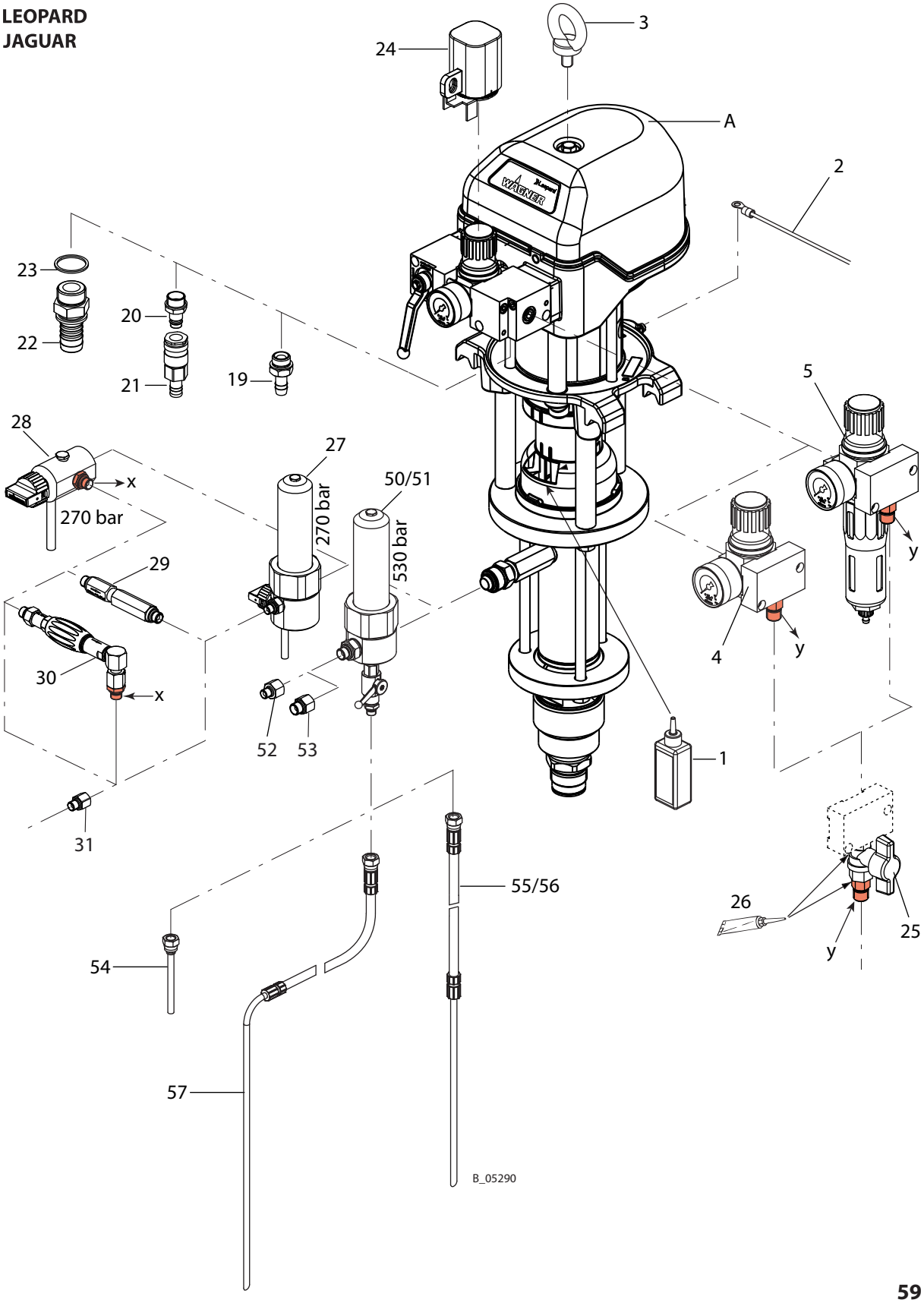
LEOPARD
JAGUAR
3
24
A
2
23
22
20
21
19
5
28
27
50/51
x
270 bar
270 bar
530 bar
29
y
4
y
30
x
52
53
1
31
55/56
26
25
y
54
57
B_05290

12.2.2 MATERIAL INLET

For trouble-free intake, use hoses which are as short as possible. The maximum hose length is dependent upon the viscosity of the product, the suction height, and the nominal diameter of the hose.

Accessories for product inlet			LEOPARD 35-70	LEOPARD 35-150	LEOPARD 48-110	JAGUAR 75-150
Pos	**K**	**Designation**	**Order No.**	**Order No.**	**Order No.**	**Order No.**
A		Piston pump PE/TG	2329479	2329484	2329490	2329501
A		Piston pump PE/T	2329481	2329486	2329493	2329505
A		Piston pump PE/L	--	--	2329495	2329503
1	◆	Suction hose DN16-SSt, complete	2324110	--	--	--
2	◆	Suction hose DN25-SSt, complete	2324116			
3		LP hose fitting DN25-M36-SSt	2325408			
4*	◆	LP hose DN25-PN10-EPDM (per meter)	2323474			
5*	◆	LP hose DN25-PN10-PE (per meter)	2323595			
6		LP hose fitting DN16-M36-SSt	2325390	--	--	--
7*	◆	LP hose DN16-PN10-EPDM (per meter)	2323329	--	--	--
8*	◆	LP hose DN16-PN10-PE (per meter)	2323597	--	--	--
9		Suction tube DN16-SSt, complete	2324158	--	--	--
10		Suction tube DN25-SSt, complete	2323239			
11		Suction elbow DN25-SSt	2324247			
12		Suction pipe DN25-200L-SSt, complete	2324238			
13		Bung adapter DN25-G2"	2315163			
14		Suction pipe DN25-30L-SSt, complete	2324241			
15	◆	Suction filter DN16-18mesh-SSt	2323396	--	--	--
16	◆	Suction filter DN25-18mesh-SSt	2323325			
17		Inlet valve with valve depressor For details, see Chapter 13.6.	2329688	--	--	--

◆ = Wearing parts

* Pos 4, 5, 7, 8: max. 10 bar. If a feed pump (>10 bar) is used, do not use downstream of the feed pump.

LEOPARD
JAGUAR

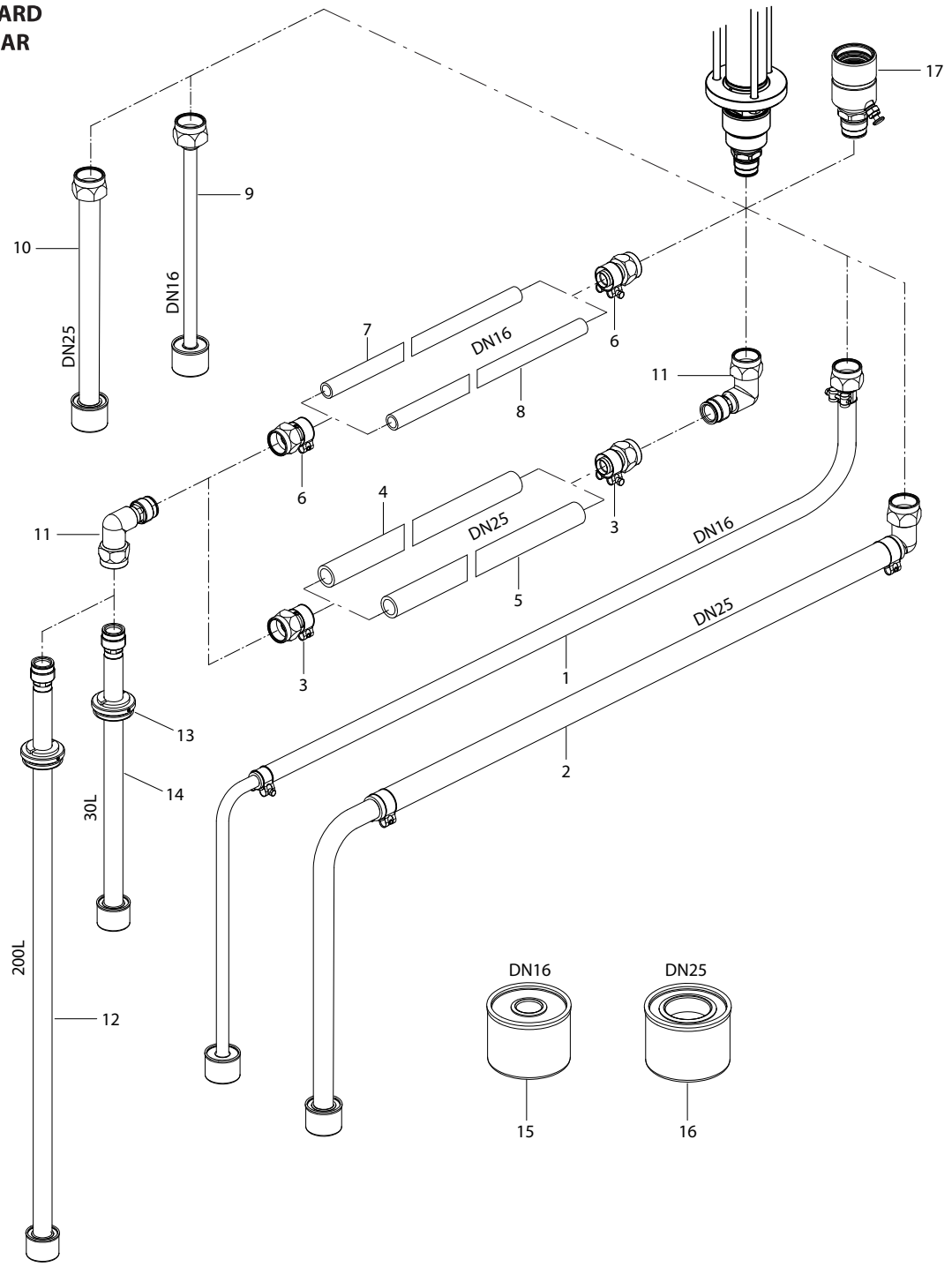

12.2.3 TROLLEY AND WALL BRACKET ACCESSORIES

Trolley/Wall Bracket Accessories		LEOPARD 35-70	LEOPARD 35-150	LEOPARD 48-110	JAGUAR 75-150
Pos K	**Designation**	**Order No.**	**Order No.**	**Order No.**	**Order No.**
A	Piston pump PE/TG	2329479	2329484	2329490	2329501
A	Piston pump PE/T	2329481	2329486	2329493	2329505
A	Piston pump PE/L	--	--	2329495	2329503
1	Trolley 6", complete For details, see Chapter 13.13.	2325916			--
2	Heavy-duty PC trolley, complete For details, see Chapter 13.14.	--		2339705	
3	Wall mount 6", complete	2332145			--
4	Wall mount 9", complete	--			369020

◆ = Wearing parts

LEOPARD
JAGUAR

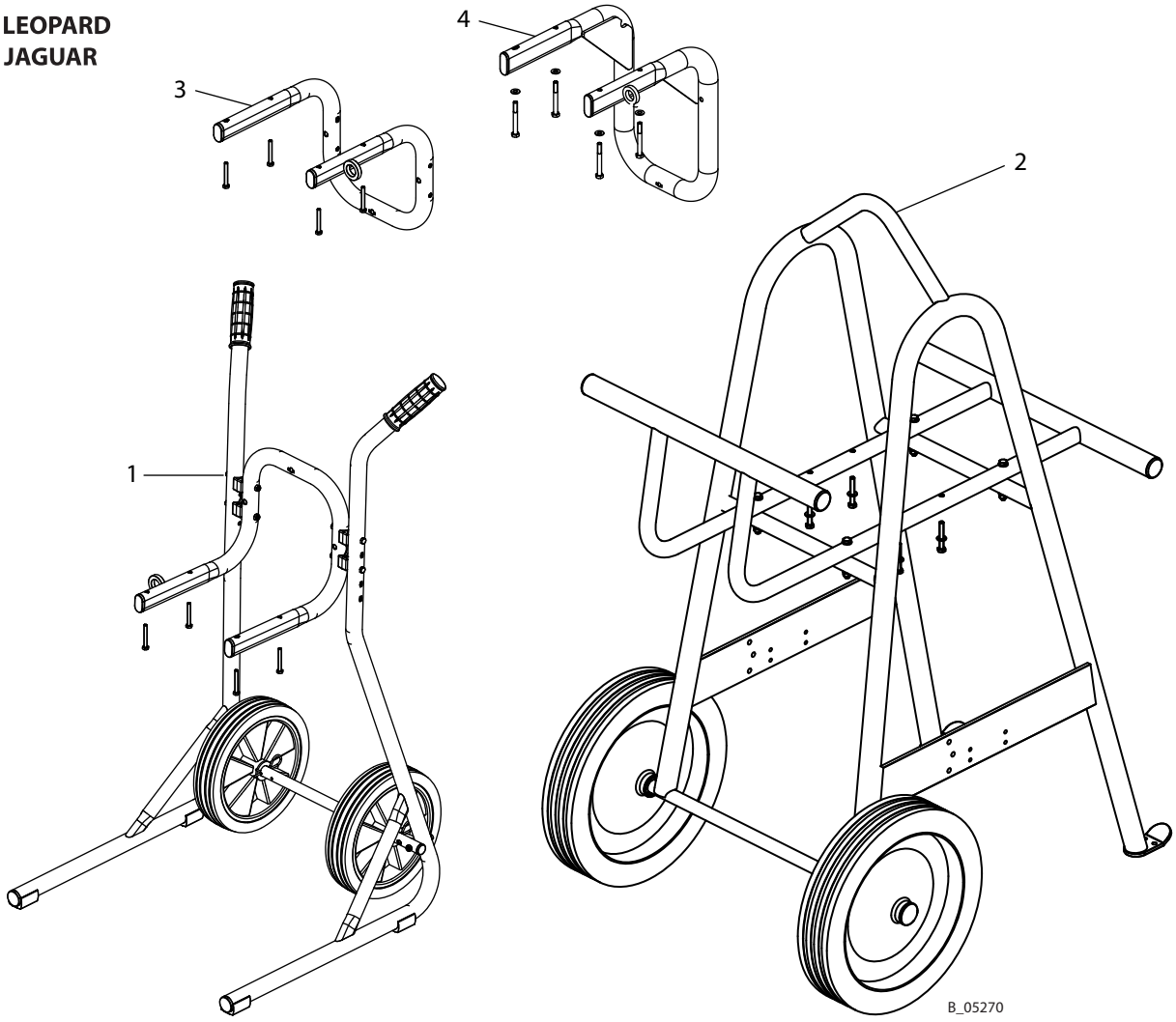

13 SPARE PARTS

→ Observe "Repair" chapter: Repair personnel and mounting materials.
→ The service manuals are available separately. See Chapter 1.3.

DANGER

Incorrect maintenance/repair!
Danger to life and equipment damage.

→ Only a WAGNER service center or a suitably trained person may carry out repairs and replace parts.
→ Only repair and replace parts that are listed in the Chapter "Spare parts" and that are assigned to the unit.
→ Before all work on the device and in the event of work interruptions:
- Relieve pressure from spray guns and devices.
- Secure spray guns against actuation.
- Switch off the energy/compressed air supply.
- Disconnect the control unit from the mains.
→ Observe the operating manual and service manuals at all times when carrying out work.

13.1 HOW CAN SPARE PARTS BE ORDERED?

Always supply the following information to ensure delivery of the right spare part:

Order number, designation and quantity
The quantity need not be the same as the number given in the quantity column "**Stk**" on the list. This number merely indicates how many of the respective parts are used in each component.

The following information is also required to ensure smooth processing of your order:
- Address for the invoice
- Address for delivery
- Name of the person to be contacted in the event of any queries
- Type of delivery (normal mail, express delivery, air freight, courier, etc.)

Identification in spare parts lists.

Explanation of column "**K**" (labeling) in the following spare parts lists:

◆ Wearing parts
Note: These parts are not covered by warranty terms.

● Not part of standard equipment, available, however, as additional extra.

13.2 OVERVIEW OF THE COMPONENTS

		WILDCAT 10-70		WILDCAT 18-40	
		PE/TG	PE/T	PE/TG	PE/T
Pos	**Designation**	**Order No.**	**Order No.**	**Order No.**	**Order No.**
1	Piston pump	2329460	2329462	2329456	2329458
2	Fluid section	2329645	2329647	2329641	2329643
3	Air motor 3/75	2329613			
4	Connection set for air motor - fluid section	2350030		2350028	
9	Grounding cable, complete	236219			
10	Molykote® DX grease	9992616			
Tightening torque for air motor/fluid section		25 Nm; 18 lbft			

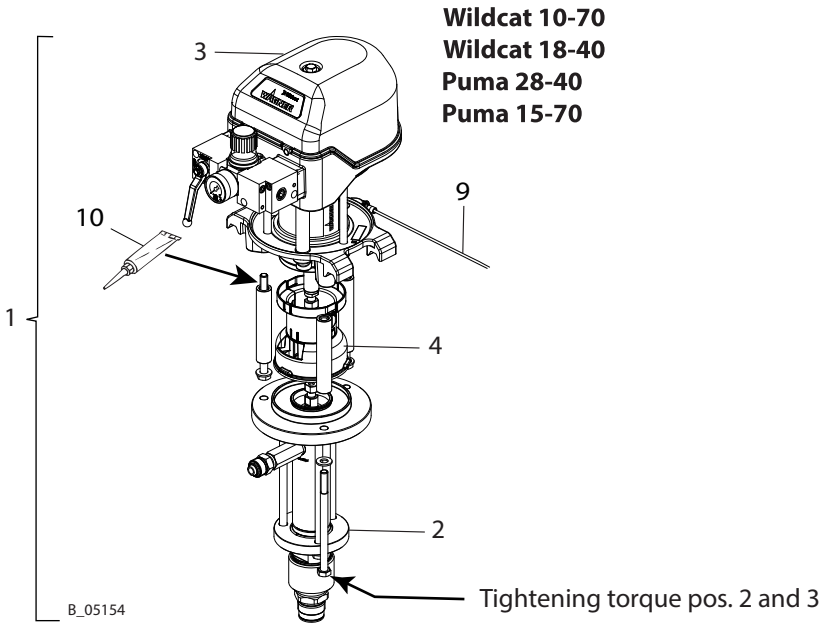

		PUMA 28-40		PUMA 15-70	
		PE/TG	PE/T	PE/TG	PE/T
Pos	**Designation**	**Order No.**	**Order No.**	**Order No.**	**Order No.**
1	Piston pump	2329467	2329469	2329471	2329473
2	Fluid section	2329641	2329643	2329645	2329647
3	Air motor	2329617			
4	Connection set for air motor - fluid section	2350028		2350030	
9	Grounding cable, complete	236219			
10	Molykote® DX grease	9992616			
Tightening torque for air motor/fluid section		25 Nm; 18 lbft			

		PUMA 15-150		PUMA 21-110	
		PE/TG	PE/T	PE/TG	PE/T
Pos	**Designation**	**Order No.**	**Order No.**	**Order No.**	**Order No.**
1	Piston pump	2329475	2329477	2329517	2330614
2	Fluid section	2329650	2329652	2329654	2329656
3	Air motor	2329619			
4	Connection set for air motor - fluid section	2350031			
9	Grounding cable, complete	236219			
10	Molykote® DX grease	9992616			
Tightening torque for air motor/fluid section		50 Nm; 37 lbft			

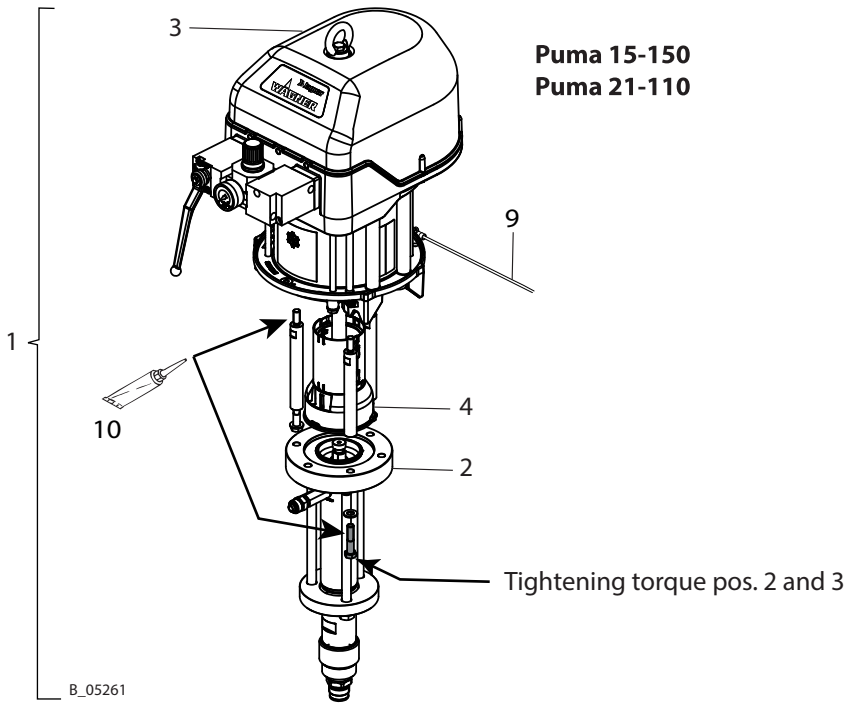

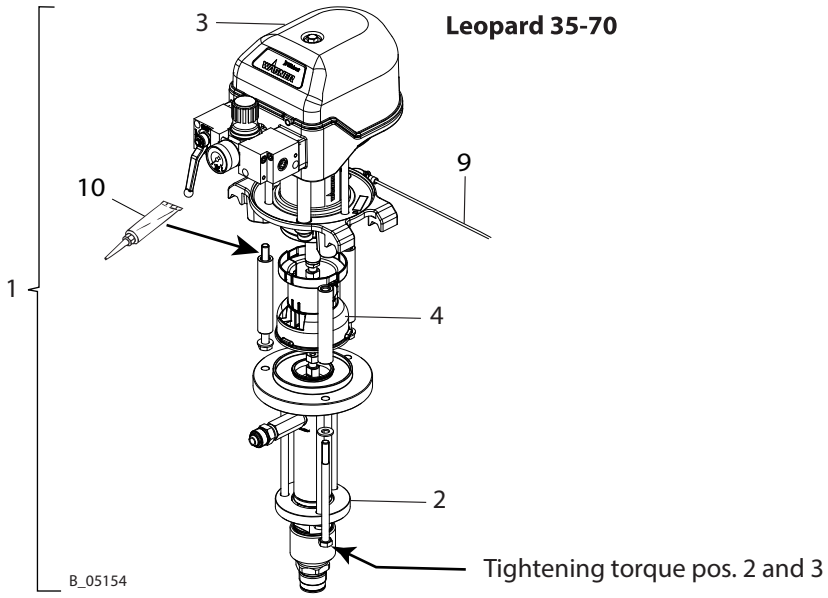

		LEOPARD 35-70		LEOPARD 35-150	
		PE/TG	PE/T	PE/TG	PE/T
Pos	**Designation**	**Order No.**	**Order No.**	**Order No.**	**Order No.**
1	Piston pump	2329479	2329481	2329484	2329486
2	Fluid section	2329645	2329647	2329650	2329652
3	Air motor	2329621		2329623	
4	Connection set for air motor - fluid section	2350032		2350033	
9	Grounding cable, complete	236219			
10	Molykote® DX grease	9992616			
Tightening torque for air motor/fluid section		25 Nm; 18 lbft		50 Nm; 37 lbft	

		LEOPARD 48-110		
		PE/TG	PE/T	PE/L
Pos	**Designation**	**Order No.**	**Order No.**	**Order No.**
1	Piston pump	2329490	2329493	2329495
2	Fluid section	2329654	2329656	2329658
3	Air motor	2329623		
4	Connection set for air motor - fluid section	2350033		
9	Grounding cable, complete	236219		
10	Molykote® DX grease	9992616		
Tightening torque for air motor/fluid section		50 Nm; 37 lbft		

		JAGUAR 75-150		
		PE/TG	PE/T	PE/L
Pos	**Designation**	**Order No.**	**Order No.**	**Order No.**
1	Piston pump	2329501	2329505	2329503
2	Fluid section	2329650	2329652	2329664
3	Air motor	2329625		
4	Connection set for air motor - fluid section	2350033		
9	Grounding cable, complete	236219		
10	Molykote® DX grease	9992616		
Tightening torque for air motor/fluid section		50 Nm; 37 lbft		

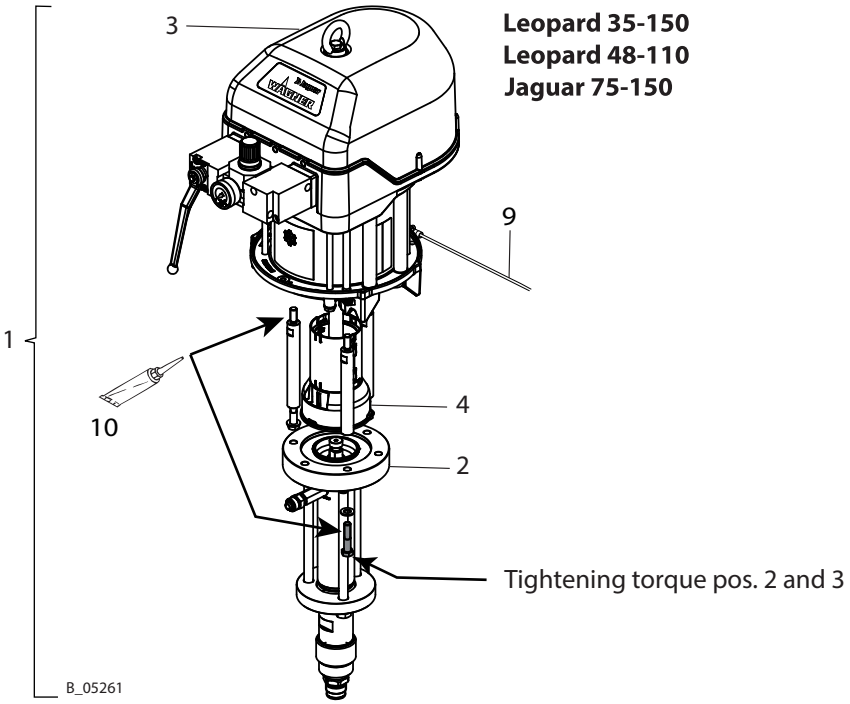

13.3 AIR MOTORS

13.3.1 WILDCAT, PUMA, LEOPARD AIR MOTORS

DANGER

Incorrect maintenance/repair!
Danger to life and equipment damage.

- → Only a WAGNER service center or a suitably trained person may carry out repairs and replace parts.
- → Only repair and replace parts that are listed in the Chapter "Spare parts" and that are assigned to the unit.
- → Before all work on the device and in the event of work interruptions:
  - Relieve pressure from spray guns and devices.
  - Secure spray guns against actuation.
  - Switch off the energy/compressed air supply.
  - Disconnect the control unit from the mains.
- → Observe the operating manual and service manuals at all times when carrying out work.

Air motor spare parts list

				WILDCAT 10-70 18-40	PUMA 28-40 15-70	PUMA 21-110 15-150	LEOPARD 35-70	LEOPARD 48-110 35-150
Pos	**K**	**Designation**	**Stk**	**Order No.**	**Order No.**		**Order No.**	
1		Air motor	1	2329613	2329617	2329619	2329621	2329623
2		Flange	1	367316			368316	
3		Piston rod	1	367302		367402	368302	368402
4		Cylinder pipe	1	366303	367303	367403	368303	368403
5		Compressed air pipe	1	367304		367404	368304	368404
6		Control air pipe	1	367305		367405	367305	367405
8		Plug	2	367307				
9	◆ ★	Outlet seal	2	L414.06C			L423.06	
10		Connecting part	1	367309			368309	
11		Silencer	1	367310			368310	
12		Hood	1	367311			368311	
13	◆ ★	Compressed air filter	1	367313				
14	◆ ★	Control air filter	1	367314				
15		Fluid warning label	1	2332082				
16		Shoulder screw	2	367318			368324	
17	◆	Sound deadening pad	1	367319			368319	
18		Cotter pin	2	367320			368320	
23		Filter holder	1	367324				
25		Throttle	1				367325	

◆ = Wearing parts
★ = Included in service set.

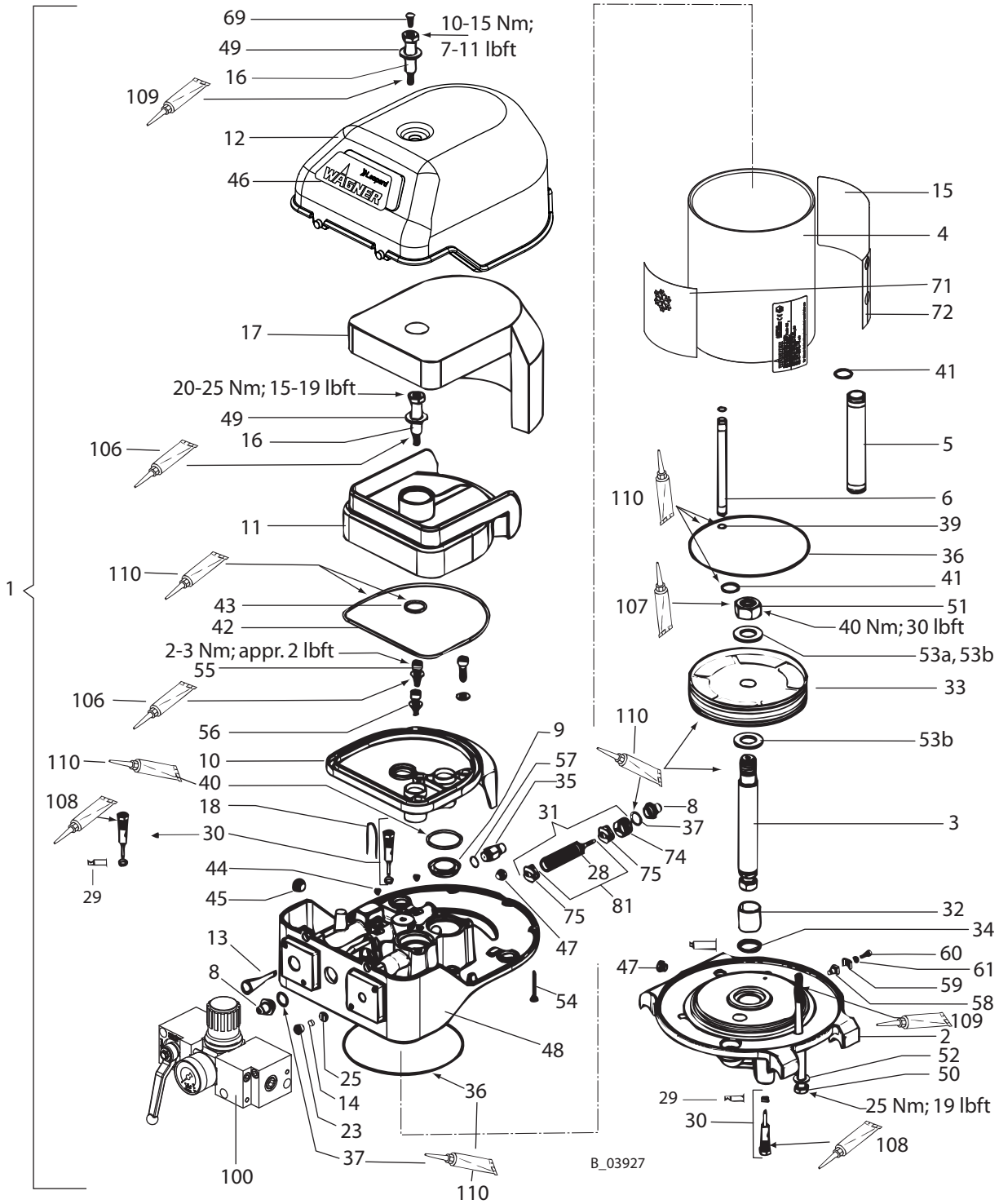

Pressure regulator (pos. 100):
For details, see Chapter 13.3.2 or 13.3.3

Do not dismount the piston (pos. 81).

Air motor spare parts list

Pos	K	Designation	Stk	WILDCAT 10-70 18-40	PUMA 28-40 15-70	PUMA 21-110 15-150	LEOPARD 35-70	LEOPARD 48-110 35-150
				Order No.	Order No.		Order No.	
28	◆	O-ring	6	9971123			9974142	
29	◆	Rod seal	2	9974217				
30	◆	Pilot valve	2	369290				
31	◆	Spool and sleeve assembly, complete	1	9943080			9943081	
32	◆	Permaglide bushing	1	9962018			9962019	
33	◆	Complete piston	1	9998663	9998661		9998662	
34	◆ ★	Seal wiper ring	1	9974090			9974091	
35		Safety valve 8.4 bar	1	368288				
		Safety valve 7.5 bar					368286	
		Safety valve 8.1 bar						368287
36	◆ ★	O-ring	2	9974115	9974084		9974087	
37	◆ ★	O-ring	2	9974085				
39	◆ ★	O-ring	2	9974089				
40	◆ ★	O-ring	2	9974095			9974096	
41	◆ ★	O-ring	2	9971448			9971137	
42	◆ ★	O-ring	1	9974097			9974100	
43	◆ ★	O-ring	1	9974098			9974101	
44		Threaded plug	1	9998674				
45		Threaded plug	1	9998274				
46		WAGNER label	1	2330369	2330370		2330371	
47		Threaded plug	2	9998675				
48		Control housing	1	367315			368315	
49		Washer	2	9925033		9920106	9925026	
50		Hexagon screw	3	9900225		9907121	9900225	9907121
51		Hexagon nut	1	9910101			9910605	
52		Washer	3	9920106				
53a		Washer	1	9920107				
53b		Washer	2				9920110	
54		SFS screw	2	9907126				
		SFS screw	3				9907125	
55		Socket cap screw M6x16	3	9900325			9900313	
56		Washer	3	9920103			9920102	
57	◆ ★	Sealing ring	1	9970149				
58		Base	1	9952668				
59		Clamping bracket	1	9952667				
60		Socket cap screw	1	9900701				
61		Spring washer	1	9921505				
69		Drive fastener	1	9998718				
71		IceBreaker label	1	2330382				
72		Warning label	1	2332077				

◆ = Wearing parts

★ = Included in service set.

Air motor spare parts list				WILDCAT 10-70 18-40	PUMA 28-40 15-70	PUMA 21-110 15-150	LEOPARD 35-70	LEOPARD 48-110 35-150
Pos	**K**	**Designation**	**Stk**	**Order No.**	**Order No.**		**Order No.**	
74	◆	Detent element, complete ISO 1/2	1	368038				
75	◆	Damper ISO 1/2	2	368313				
81	◆	Spool and sleeve assembly ISO1 or ISO2	1	9943097			9943098	
100		Pressure regulator unit, 4", complete. For details, see Chapter 13.3.2	1	2328606				
		Pressure regulator unit 6", complete. For details, see Chapter 13.3.3	1				2328607	
106		Loctite® 222 50ml; 50cc	1	9992590				
107		Loctite® 243, 50ml; 50cc	1	9992511				
108		Loctite® 542, 50ml; 50cc	1	9992831				
109		Molykote® DX grease	1	9992616				
110		Mobilux® EP 2 grease	1	9998808				

	Service set	1	366995	367995	368995

◆ = Wearing parts

★ = Included in service set.

13.3.2 WILDCAT AND PUMA AIR MOTOR REGULATORS

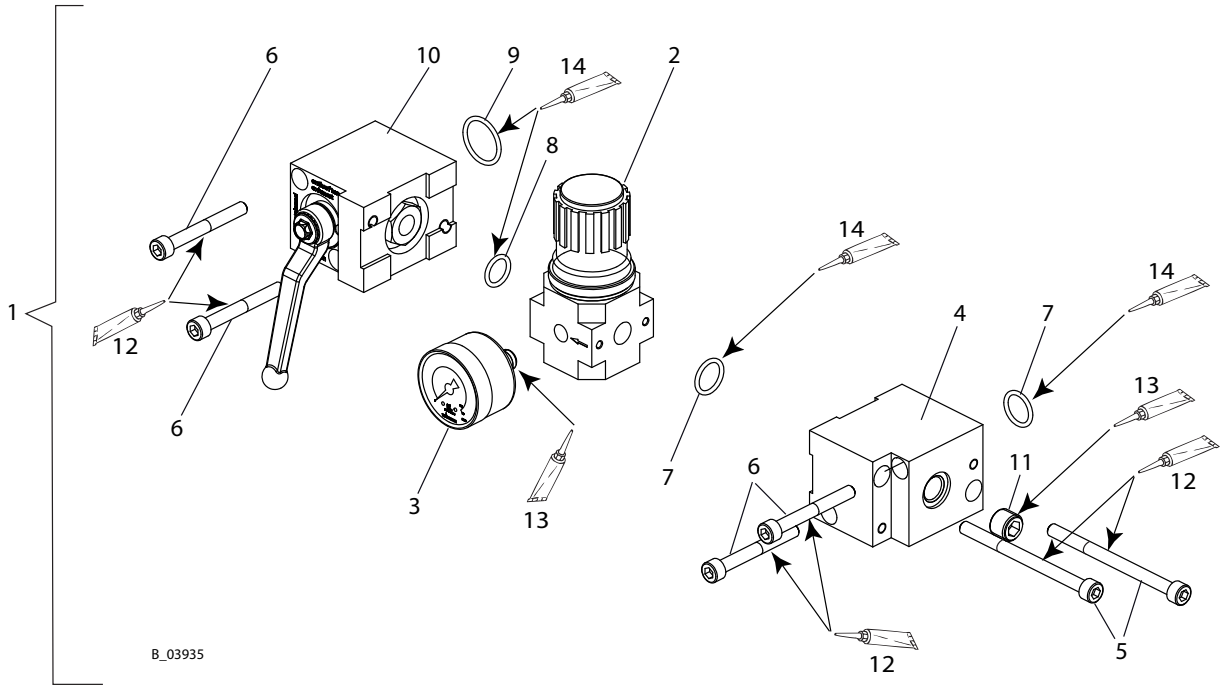

Pos 3: Screw in the pressure gauge until the white sealing ring is completely in the filter control valve. Thereafter continue turning the pressure gauge only to align the display scale.

Air motor regulator spare parts list

Pos	K	Designation	Stk	WILDCAT 10-70 18-40	PUMA 28-40 15-70	PUMA 21-110 15-150
				Order No.		
1		Pressure regulator unit 4", complete	1	2328606		
2	◆	Pressure regulator valve 4"	1	2309972		
3	◆	Pressure gauge 0-10 bar (d40)	1	9998677		
4		Distribution piece 4"	1	2309744		
5		Hexagon socket cylinder head screw	2	9907039		
6		Hexagon socket cylinder head screw	4	9900316		
7	◆	O-ring	2	9974166		
8	◆	O-ring	1	9971313		
9	◆	O-ring	1	9971137		
10	◆	Edge ball valve 4"	1	2310635		
11		Screw plug	1	104376		
12		Molykote® DX grease	1	9992616		
13		Loctite® 542, 50ml; 50cc	1	9992831		
14		Mobilux® EP 2 grease	1	9998808		

◆ = Wearing parts
★ = Included in service set.

13.3.3 LEOPARD AIR MOTOR REGULATOR

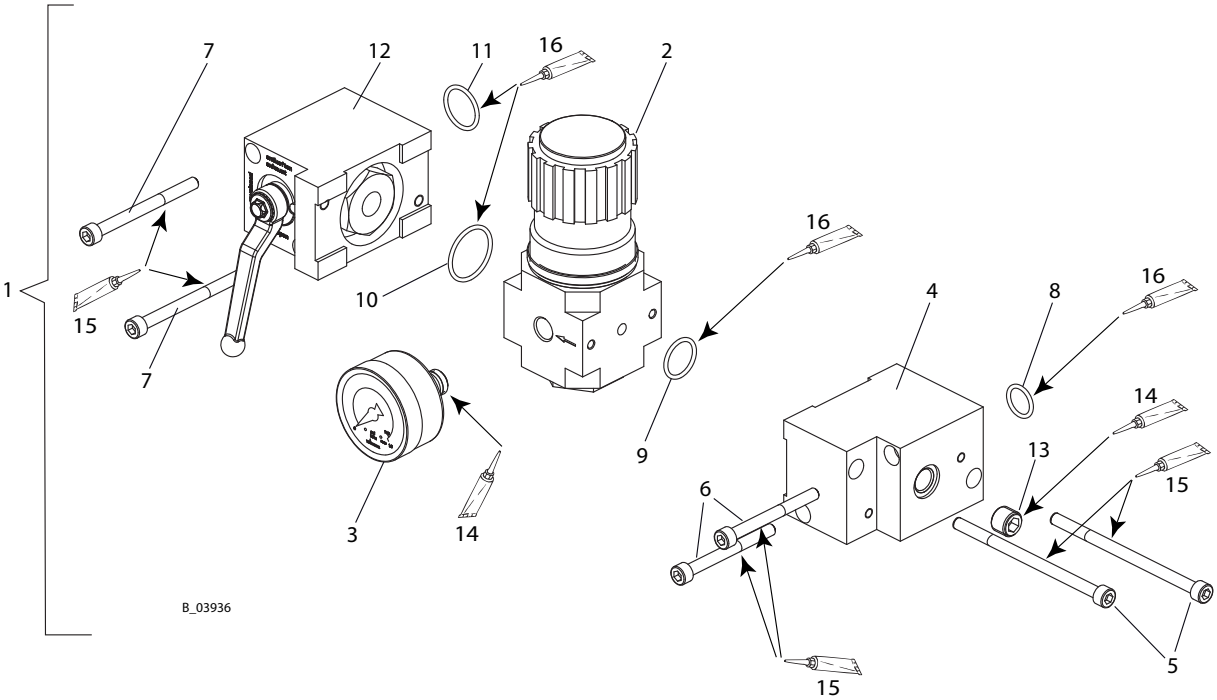

Pos 3: Screw in the pressure gauge until the white sealing ring is completely in the filter control valve. Thereafter continue turning the pressure gauge only to align the display scale.

Air motor regulator spare parts list				**LEOPARD 35-70**	**LEOPARD 48-110 35-150**
Pos	**K**	**Designation**	**Stk**	**Order No.**	
1		Pressure regulator unit 6", complete	1	2328607	
2	◆	Pressure regulator valve 6"	1	2309973	
3	◆	Pressure gauge 0-10 bar (d50)	1	9998725	
4		Distribution piece 6"	1	2309783	
5		Hexagon socket cylinder head screw	2	3050699	
6		Hexagon socket cylinder head screw	2	9907024	
7		Hexagon socket cylinder head screw	2	9906020	
8	◆	O-ring	1	9974166	
9	◆	O-ring	1	9971018	
10	◆	O-ring	1	3105540	
11	◆	O-ring	1	9971137	
12	◆	Edge ball valve 6"	1	2310636	
13		Screw plug	1	104376	
14		Loctite® 542	1	9992831	
15		Molykote® DX grease	1	9992616	
16		Mobilux® EP 2 grease	1	9998808	

◆ = Wearing parts

★ = Included in service set.

13.3.4 JAGUAR AIR MOTOR

DANGER

Incorrect maintenance/repair!
Danger to life and equipment damage.

→ Only a WAGNER service center or a suitably trained person may carry out repairs and replace parts.
→ Only repair and replace parts that are listed in the Chapter "Spare parts" and that are assigned to the unit.
→ Before all work on the device and in the event of work interruptions:
- Relieve pressure from spray guns and devices.
- Secure spray guns against actuation.
- Switch off the energy/compressed air supply.
- Disconnect the control unit from the mains.
→ Observe the operating manual and service manuals at all times when carrying out work.

Jaguar air motor spare parts list				JAGUAR 75-150
Pos	**K**	**Stk**	**Designation**	**Order No.**
1		1	Air motor	2329625
2		1	Flange	369316
3	◆	1	Piston rod	368402
4		1	Cylinder pipe	369403
5		2	Compressed air pipe	368404
6		1	Control air pipe	367405
8		1	Sealing plug	369307
9	◆ ★	2	Outlet seal	369312
10		1	Connecting part	369309
11		1	Silencer	369310
12		1	Hood	369905
13	◆ ★	1	Compressed air filter	369313
14	◆	1	Control air filter	367314
15		1	Fluid warning label	2332082
16		1	Shoulder screw	369318
17	◆	1	Sound absorbing mat	369906
18		2	Cotter pin	369320
23		1	Filter holder	367324
25		1	Throttle	367325
28	◆	6	O-ring	9974143

◆ = Wearing parts
★ = Included in service set.
● = Not part of the standard equipment but available as a special accessory.

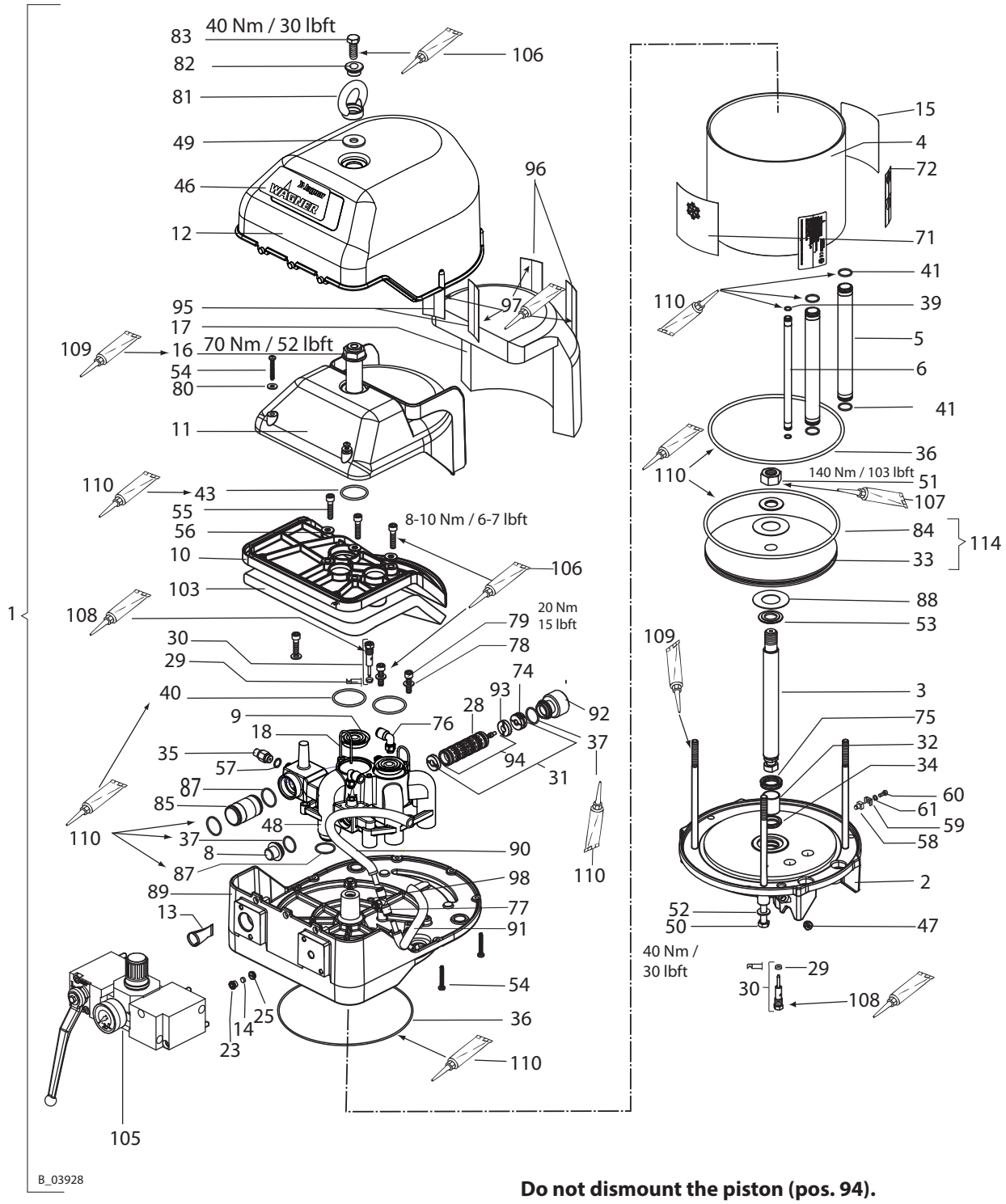

Do not dismount the piston (pos. 94).

Pressure regulator (pos. 105):
For details, see Chapter 13.3.5

Jaguar air motor spare parts list				JAGUAR 75-150
Pos	**K**	**Stk**	**Designation**	**Order No.**
29	◆	2	Rod seal	9974217
30	◆	2	Pilot valve	369290
31	◆	1	Spool-sleeve combination assembly, ISO3	369907
32	◆	1	Permaglide bushing	9962019
33		1	Piston 9	369385
34	◆ ★	1	Seal wiper ring	9974125
35		1	Safety valve 7.5 bar	368286
36	◆ ★	2	O-ring	9974133
37	◆ ★	2	O-ring	9971056
39	◆ ★	2	O-ring	9974089
40	◆ ★	2	O-ring	9974132
41	◆ ★	4	O-ring	9971137
43	◆ ★	1	O-ring	9974165
46		1	WAGNER label	2330372
47		2	Threaded plug	9998675
48		1	Control housing	369315
49		1	Washer	9925034
50		4	Hexagon screw	9907137
51		1	Hexagon nut	9910605
52		4	Washer	9920106
53		2	Washer	369303
54		7	SFS screw	9907125
55		3	Socket cap screw	9900314
56		3	Washer	9925029
57	◆ ★	1	Sealing ring	9970149
58		1	Base	9952668
59		1	Clamping bracket	9952667
60		1	Socket cap screw	9900701
61		1	Spring washer	9921505
71		1	IceBreaker label	2330382
72		1	Warning label	2332077
74	◆	1	Detent body	369027
75		1	Rod seal profile E5	9974124
76		2	Threaded elbow fitting	9992757
77		1	Screw connector T	9992758
78		4	Washer	9920102
79		4	Socket cap screw	9900313
80		2	Washer	9925031
81		1	Lifting eye nut	369325
82		1	Shoulder ring	369324
83		1	Hexagon screw	9900150

◆ = Wearing parts

★ = Included in service set.

● = Not part of the standard equipment but available as a special accessory.

Jaguar air motor spare parts list				JAGUAR 75-150
Pos	**K**	**Stk**	**Designation**	**Order No.**
84	◆ ★	1	O-ring	9974262
85		1	Air pipe	369306
87	◆	3	O-ring	9971004
88		2	Damping washer	369304
89		1	Control flange	369317
90		1	Air hose back	369026
91		1	Air hose front	369025
92		1	Lock space 9	369326
93	◆	2	Damper ISO3	369329
94	◆	1	Spool & sleeve assembly ISO3	9943131
95	◆	1	Velcro fastener adhesive part	9999151
96	◆	1	Velcro fastener coating part	9999152
97		1	Miranit contact adhesive	9992816
98	◆	1	Viton B O-ring	9971372
103	◆	1	Sound absorbing mat 9/12"	369330
105		1	Pressure regulator unit, 9", complete. For details, see Chapter 13.3.5	2328609
106		1	Loctite® 222 50ml; 50cc	9992590
107		1	Loctite® 243 50ml; 50cc	9992511
108		1	Loctite® 542 50ml; 50cc	9992831
109		1	Molykote® DX grease	9992616
110		1	Mobilux® EP 2 grease	9998808
114	●	1	Piston 9 with SOFT O-ring	369971

	1	Service set	369987

◆ = Wearing parts

★ = Included in service set.

● = Not part of the standard equipment but available as a special accessory.

13.3.5 JAGUAR AIR MOTOR REGULATOR

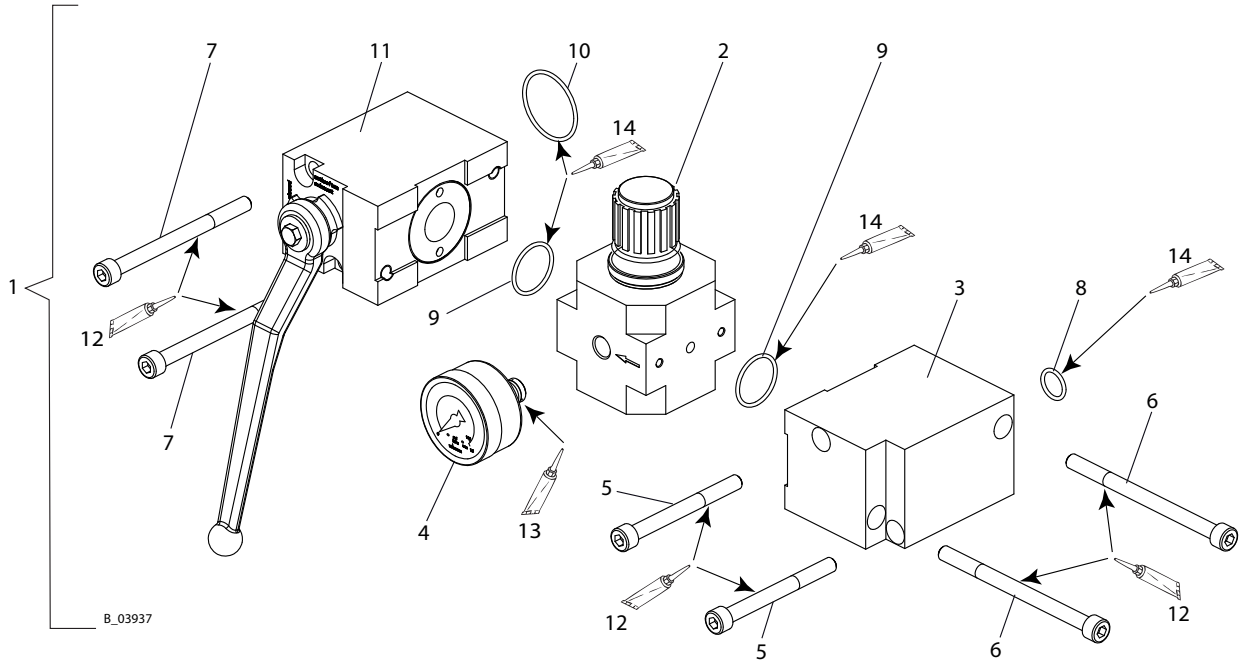

Pos 4: Screw in the pressure gauge until the white sealing ring is completely in the filter control valve. Thereafter continue turning the pressure gauge only to align the display scale.

Jaguar air motor regulator spare parts list				**JAGUAR 75-150**
Pos	**K**	**Stk**	**Designation**	**Order No.**
1		1	Pressure regulator unit 9", complete	2328609
2	◆	1	Pressure regulator valve 9"	2309974
3		1	Distribution piece 9"	2309963
4	◆	1	Pressure gauge 0-10 bar (d50)	9998725
5		2	Hexagon socket cylinder head screw	9900360
6		2	Hexagon socket cylinder head screw	9907087
7		2	Hexagon socket cylinder head screw	9900356
8	◆	1	O-ring	9974166
9	◆	2	O-ring	3105540
10	◆	1	O-ring	9971405
11	◆	1	Edge ball valve 9"	2310637
12		1	Molykote® DX grease	9992616
13		1	Loctite® 542, 50ml; 50cc	9992831
14		1	Mobilux® EP 2 grease	9998808

◆ = Wearing parts

13.4 CONNECTION SETS

13.4.1 CONNECTION SETS FOR 40–70 CM3

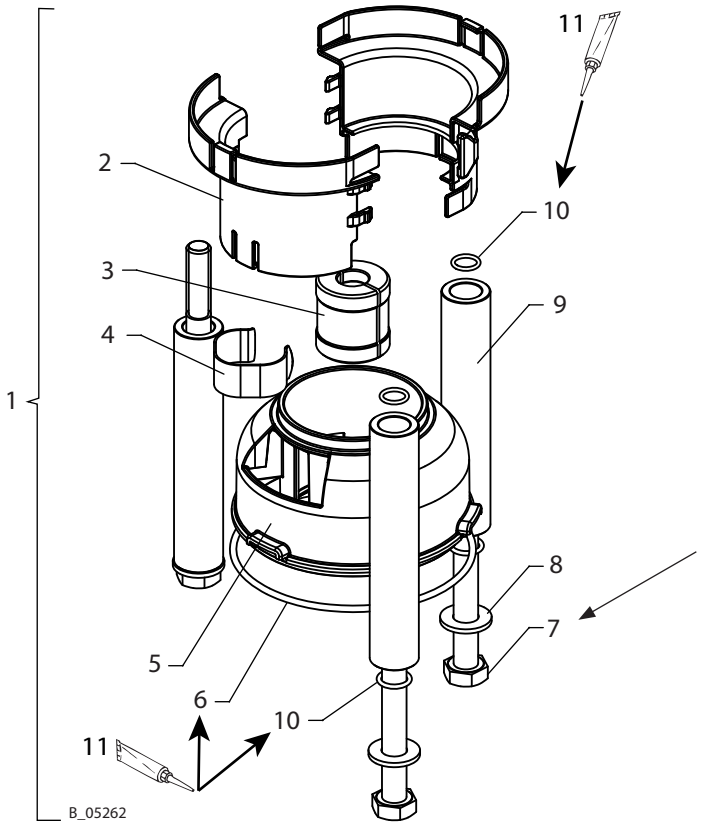

25 Nm; 18 lbft

Assembly with air motor and fluid section: see Chapter 13.2

Spare parts list for connection sets

				Wildcat 18-40 / Puma 28-40	Wildcat 10-70 / Puma 15-70	Leopard 35-70
				Connection set		
				LM-FS 1	LM-FS 2	LM-FS 4
Pos	**K**	**Stk**	**Designation**	**Order No.**	**Order No.**	**Order No.**
1		1	Connection set LM-FS …	2350028	2350030	2350032
2		2	Coupling cover stroke 75	367532		
3		1	Coupling	367529	367579	368529
4		1	Spring	367530		368530
5		1	Separating oil cup stroke 75	367531		
6	◆ ★	1	O-ring	9974093		
7		3	Hexagon screws	9900225		
8		3	Washer	9920106		
9		3	Connecting tube stroke 75	367306		
10	◆ ★	6	O-ring	9974089		
11		1	Mobilux® EP 2 grease	9998808		

◆ = Wearing parts

★ = Included in the service set of the fluid section PE/TG or PE/T (see Chapter 13.5)

13.4.2 CONNECTION SETS FOR 110–150 CM3

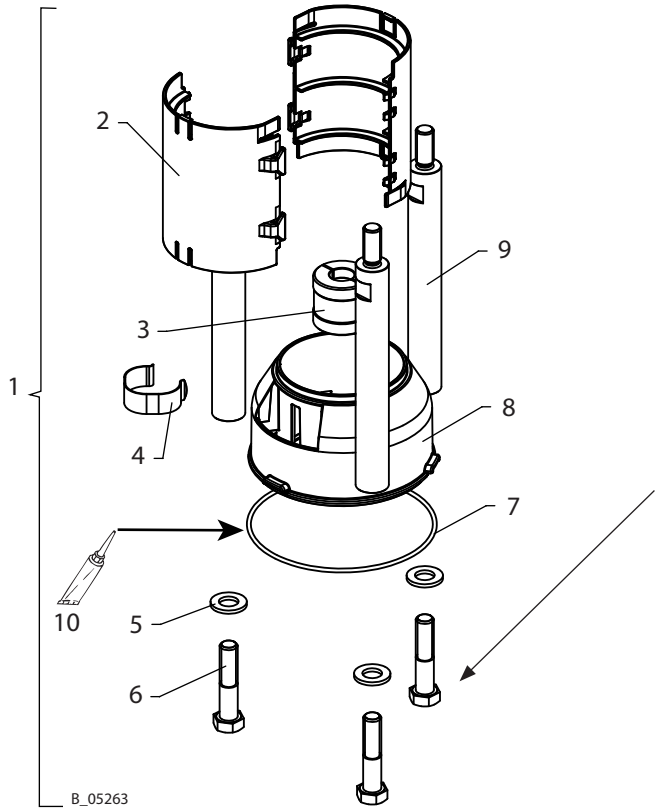

50 Nm; 37 lbft

Assembly with air motor and fluid section: see Chapter 13.2

Spare parts list for connection sets

				Puma 15-150	Leopard 35-150
					Leopard 48-110
				Puma 21-110	Jaguar 75-150
				Connection set	
				LM-FS 3	LM-FS 5
Pos	**K**	**Stk**	**Designation**	**Order No.**	**Order No.**
1		1	Connection set LM-FS …	2350031	2350033
2		2	Coupling cover stroke 150	368532	
3		1	Coupling	367579	368529
4		1	Spring	367530	368530
5		3	Washer, A12, DIN 125-1	9920107	
6		3	Hexagon screws	9900157	
7	◆ ★	1	O-ring	9974116	
8		1	Separating oil cup stroke 150	368531	
9		3	Threaded bolt M12x169	368533	
10		1	Mobilux® EP 2 grease	9998808	

◆ = Wearing parts

★ = Included in the service set of the fluid section PE/TG or PE/L (see Chapter 13.5)

13.5 FLUID SECTIONS

13.5.1 FLUID SECTIONS 40 CM3

DANGER

Incorrect maintenance/repair!
Danger to life and equipment damage.

→ Only a WAGNER service center or a suitably trained person may carry out repairs and replace parts.
→ Only repair and replace parts that are listed in the Chapter "Spare parts" and that are assigned to the unit.
→ Before all work on the device and in the event of work interruptions:
- Relieve pressure from spray guns and devices.
- Secure spray guns against actuation.
- Switch off the energy/compressed air supply.
- Disconnect the control unit from the mains.
→ Observe the operating manual and service manuals at all times when carrying out work.

Fluid sections spare parts list				**40 cm3 PE/TG**	**40 cm3 PE/T**
Pos	**K**	**Stk**	**Designation**	**Order No.**	**Order No.**
1		1	Fluid section	2329641	2329643
2		1	Pipe	367502	
3		1	Cylinder	367503	
4		1	Inlet housing 40	2322467	
5	◆	1	Piston	367505	
6		1	Valve screw	367506	
7	◆ ★	1	Ball guide, inlet	367507	
8		1	Connecting flange	367501	
9	◆	1	Valve seat, inlet	367509	
10	◆	1	Valve seat, outlet	367510	
11		1	Snap ring flange	367511	
12		2	Snap ring half	367512	
13		1	Securing ring	367513	
16		1	Support ring	367516	
17		1	Pressure ring	367517	
18		1	Support ring	367518	
19		1	Pressure ring	367519	

◆ = Wearing parts
★ = Included in the service set (more parts, see Chapter 13.4.1.).
● = Not part of the standard equipment but available as a special accessory.

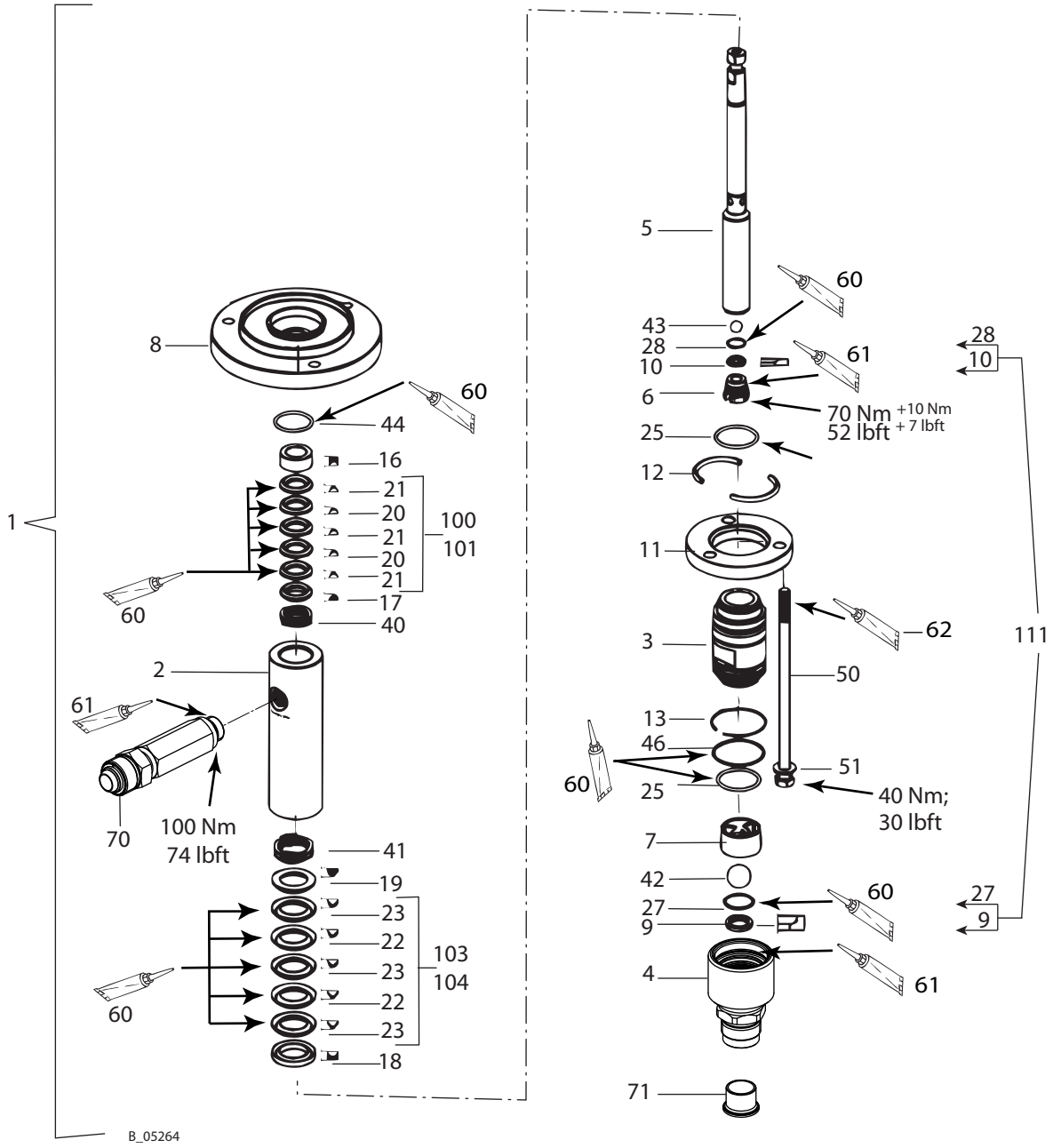

Pos. 4 Tighten by hand on block.

Use a standard wrench only if necessary. In this case use a spanner to hold pos. 3.

Fluid sections spare parts list				40 cm3 PE/TG	40 cm3 PE/T
Pos	**K**	**Stk**	**Designation**	**Order No.**	**Order No.**
100	◆	1	Packing PE/TG, complete (small)	115805	
101	◆	1	Packing PE/T, complete (small)		123219
20	◆ ★	2	Sealing collar TG (small)	123398	
20	◆ ★	2	Sealing collar T (small)		123426
21	◆ ★	3	Sealing collar PE (small)	123427	123427
103	◆	1	Packing PE/TG, complete (large)	367991	
104	◆	1	Packing PE/T, complete (large)		367992
22	◆ ★	2	Sealing collar TG (large)	367522	
22	◆ ★	2	Sealing collar T (large)		367900
23	◆ ★	3	Sealing collar PE (large)	367523	367523
25	◆ ★	2	O-ring	367525	
27	◆ ★	1	O-ring	367527	
28	◆ ★	1	O-ring	367528	
40	◆ ★	1	Wave spring (small)	9998669	
41	◆ ★	1	Wave spring (large)	9998670	
42	◆ ★	1	Ball (large)	9941513	
43	◆ ★	1	Ball (small)	9941518	
44	◆ ★	1	O-ring	9974094	
46	◆ ★	1	O-ring	9974106	
50		3	Hexagon screw	9907124	
60		1	Mobilux® EP 2 grease	9998808	
61		1	Anti-seize paste tube	9992609	
62		1	Molykote® DX grease	9992616	
70		1	Fitting SF-MM-G3/8"-M24x1.5-PN530-SSt	2329922	
71		1	Sealing sleeve	2329898	
		1	Service set PE/TG	367990	
		1	Service set PE/T		367994
111	●	1	Valve seat set 40 stainless steel*	2331582	

◆ = Wearing parts

★ = Included in the service set (more parts, see Chapter 13.4.1.).

● = Not part of the standard equipment but available as a special accessory.

* Note on pos. 111:

Valve seat set 40 stainless steel consisting of: pos. 28, 10, 27, 9, but in stainless steel version.

13.5.2 FLUID SECTIONS 70 CM3

DANGER

Incorrect maintenance/repair!
Danger to life and equipment damage.

→ Only a WAGNER service center or a suitably trained person may carry out repairs and replace parts.
→ Only repair and replace parts that are listed in the Chapter "Spare parts" and that are assigned to the unit.
→ Before all work on the device and in the event of work interruptions:
- Relieve pressure from spray guns and devices.
- Secure spray guns against actuation.
- Switch off the energy/compressed air supply.
- Disconnect the control unit from the mains.
→ Observe the operating manual and service manuals at all times when carrying out work.

Fluid sections spare parts list				**70 cm3 PE/TG**	**70 cm3 PE/L**	**70 cm3 PE/T**
Pos	**K**	**Stk**	**Designation**	**Order No.**	**Order No.**	**Order No.**
1		1	Fluid section	2329645	-	2329647
2		1	Pipe	368502		
3		1	Cylinder	368503		
4		1	Inlet housing 70	2322465		
5	◆	1	Piston	368505		
6		1	Valve screw	368506		
7	◆ ★	1	Ball guide, inlet	368507		
8		1	Connecting flange	368501		
9	◆	1	Valve seat, inlet	368509		
10	◆	1	Valve seat, outlet	368510		
11		1	Snap ring flange	368511		
12		2	Snap ring half	368512		
13		1	Securing ring	368513		
16		1	Support ring	368516		
17		1	Pressure ring	367519		
18		1	Support ring	368518		
19		1	Pressure ring	368519		
100	◆	1	Packing PE/TG, complete (small)	367991		
101	◆	1	Packing PE/T, complete (small)			367992
102	◆	1	Packing PE/L complete (small)		367993	

◆ = Wearing parts
★ = Included in the service set (more parts, see Chapter 13.4.1.).
● = Special accessories

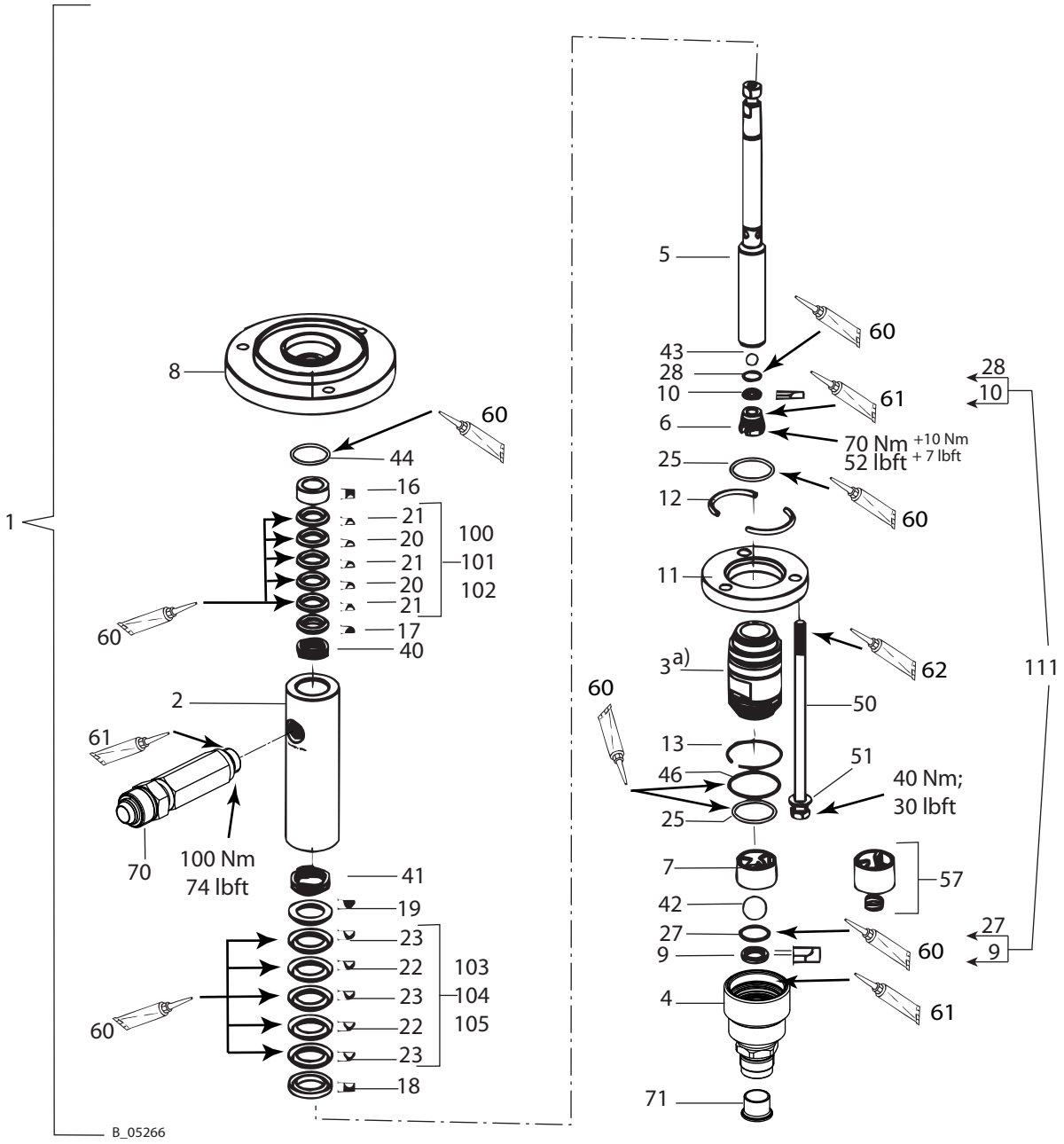

Pos. 4 Tighten by hand on block.

Use a standard wrench only if necessary. In this case use a spanner to hold pos. 3.

Fluid sections spare parts list				70 cm3 PE/TG	70 cm3 PE/L	70 cm3 PE/T
Pos	**K**	**Stk**	**Designation**	**Order No.**	**Order No.**	**Order No.**
20	◆ ★	2	Sealing collar TG (small)	367522		
	◆ ★	2	Sealing collar T (small)			367900
	◆	2	Sealing collar L (small)		367922	
21	◆ ★	3	Sealing collar PE (small)	367523	367523	367523
103	◆	1	Packing PE/TG, complete (large)	368991		
104	◆	1	Packing PE/T, complete (large)			368992
105	◆	1	Packing PE/L, complete (large)		368993	
22	◆ ★	2	Sealing collar TG (large)	368522		
	◆ ★	2	Sealing collar T (large)			368900
	◆	2	Sealing collar L (large)		368922	
23	◆ ★	3	Sealing collar PE (large)	368523	368523	368523
25	◆ ★	2	O-ring	368525		
27	◆ ★	1	O-ring	368527		
28	◆ ★	1	O-ring	368528		
40	◆ ★	1	Wave spring (small)	9998670		
41	◆ ★	1	Wave spring (large)	9998671		
42	◆ ★	1	Ball (large)	9943082		
43	◆ ★	1	Ball (small)	9941512		
44	◆ ★	1	O-ring	9974092		
46	◆ ★	1	O-ring	9974107		
50		3	Hexagon screw	9907124		
57	●	1	Ball guide for high viscosity products	369926		
60		1	Mobilux® EP 2 grease	9998808		
61		1	Anti-seize paste tube	9992609		
62		1	Molykote® DX grease	9992616		
70		1	Fitting SF-MM-G3/8"-M24x1.5-PN530-SSt	2329922		
71		1	Sealing sleeve	2329898		
		1	Service set PE/TG	368990		
		1	Service set PE/T			368994
111	●	1	Valve seat set 70 stainless steel*	2331585		

◆ = Wearing parts

★ = Included in the service set (more parts, see Chapter 13.4.1.).

● = Special accessories

* Note on pos. 111:
Valve seat set 70 stainless steel consisting of: pos. 28, 10, 27, 9, but in stainless steel version.

13.5.3 FLUID SECTIONS 110 CM3

DANGER

Incorrect maintenance/repair!
Danger to life and equipment damage.

→ Only a WAGNER service center or a suitably trained person may carry out repairs and replace parts.
→ Only repair and replace parts that are listed in the Chapter "Spare parts" and that are assigned to the unit.
→ Before all work on the device and in the event of work interruptions:
- Relieve pressure from spray guns and devices.
- Secure spray guns against actuation.
- Switch off the energy/compressed air supply.
- Disconnect the control unit from the mains.
→ Observe the operating manual and service manuals at all times when carrying out work.

Fluid sections spare parts list				**110 cm3 PE/TG**	**110 cm3 PE/L**	**110 cm3 PE/T**
Pos	**K**	**Stk**	**Designation**	**Order No.**	**Order No.**	**Order No.**
1		1	Fluid section	2329654	2329658	2329656
2		1	Pipe	368434		
3		1	Cylinder	368435		
4		1	Inlet housing 150	2327888		
5	◆	1	Piston	368433		
6		1	Valve screw	367506		
7	◆ ★	1	Ball guide, inlet	368507		
8		1	Connecting flange	368551		
9	◆	1	Valve seat, inlet	368509		
10	◆	1	Valve seat, outlet	367510		
11		1	Snap ring flange	368561		
12		2	Snap ring half	368512		
13		1	Securing ring	368513		
16		1	Support ring	368428		
17		1	Pressure ring	368425		
18		1	Support ring	368430		
19		1	Pressure ring	368432		

◆ = Wearing parts
★ = Included in the service set (more parts, see Chapter 13.4.2.).
● = Special accessories

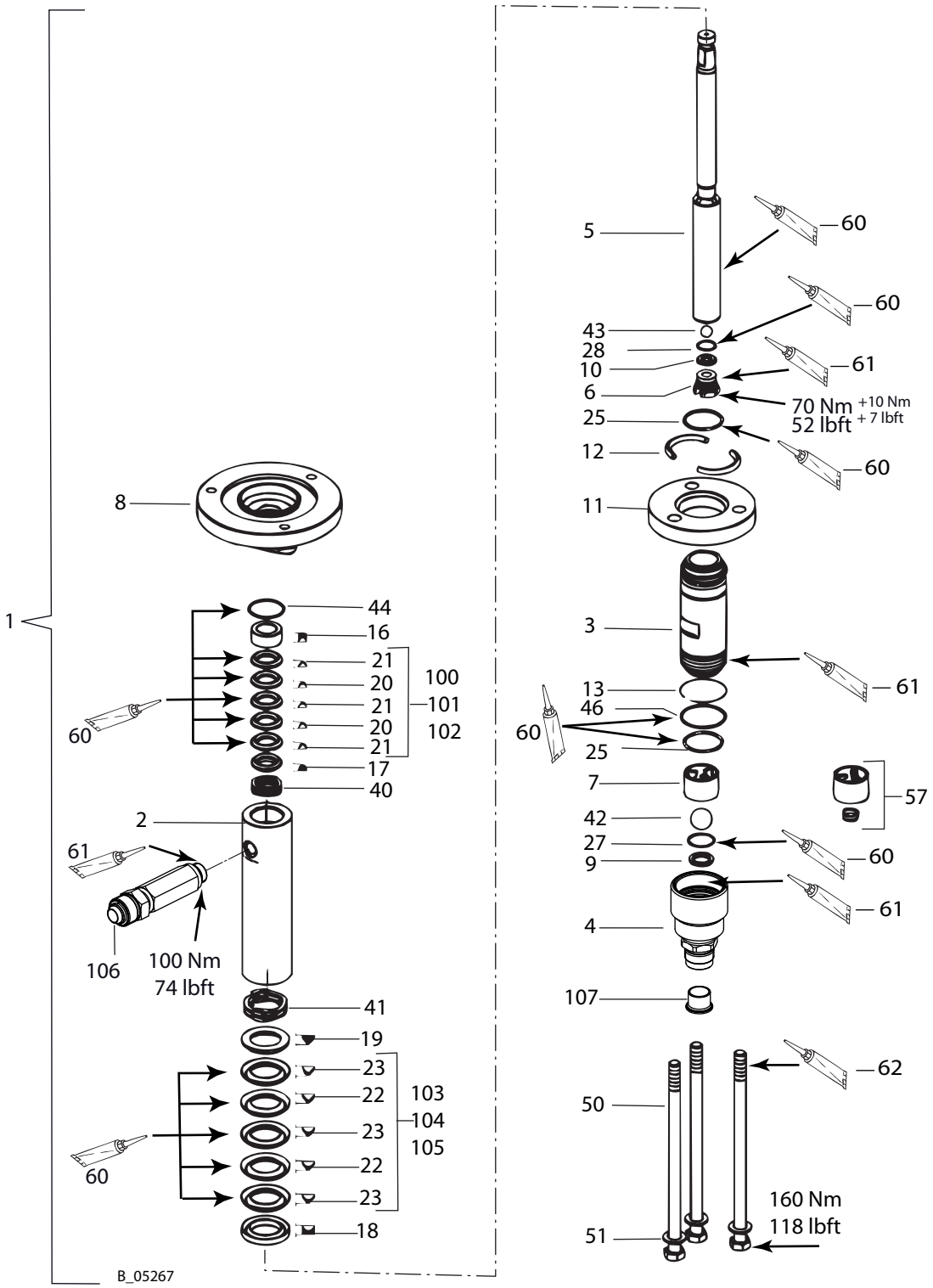

Pos. 4 Tighten by hand on block.

Use a standard wrench only if necessary. In this case use a spanner to hold pos. 3.

Fluid sections spare parts list

Pos	K	Stk	Designation	110 cm3 PE/TG Order No.	110 cm3 PE/L Order No.	110 cm3 PE/T Order No.
100	◆	1	Packing PE/TG, complete (small)	368253		
101	◆	1	Packing PE/T, complete (small)			368297
102	◆	1	Packing PE/L complete (small)		368295	
20	◆ ★	2	Sealing collar TG (small)	368426		
20	◆ ★	2	Sealing collar T (small)			368436
20	◆ ★	2	Sealing collar L (small)		368437	
21	◆ ★	3	Sealing collar PE (small)	368427	368427	368427
103	◆	1	Packing PE/TG, complete (large)	368299		
104	◆	1	Packing PE/T, complete (large)			368296
105	◆	1	Packing PE/L, complete (large)		368294	
22	◆ ★	2	Sealing collar TG (large)	368429		
22	◆ ★	2	Sealing collar T (large)			368438
22	◆ ★	2	Sealing collar L (large)		368439	
23	◆ ★	3	Sealing collar PE (large)	368431	368431	368431
25	◆ ★	2	O-ring	368525		
27	◆ ★	1	O-ring	368527		
28	◆ ★	1	O-ring	367528		
40	◆ ★	1	Wave spring (small)	9998670		
41	◆ ★	1	Wave spring (large)	9998671		
42	◆ ★	1	Ball (large)	9943082		
43	◆ ★	1	Ball (small)	9941518		
44	◆ ★	1	O-ring	9974092		
46	◆ ★	1	O-ring	9974107		
50		3	Hexagon screw	9907142		
51		3	Washer	9925011		
57	●	1	Ball guide for high viscosity products	369926		
60		1	Mobilux® EP 2 grease	9998808		
61		1	Anti-seize paste tube	9992609		
62		1	Molykote® DX grease	9992616		
106		1	Fitting SF-MM-G3/8"-M24x1.5-PN530-SSt	2329922		
107		1	Sealing sleeve	2329898		

	1	Service set PE/TG	368997		
	1	Service set PE/T			2304930
	1	Service set PE/L		2319924	

◆ = Wearing parts

★ = Included in the service set (more parts, see Chapter 13.4.2.).

● = Special accessories

13.5.4 FLUID SECTIONS 150 CM3

DANGER

Incorrect maintenance/repair!
Danger to life and equipment damage.

→ Only a WAGNER service center or a suitably trained person may carry out repairs and replace parts.
→ Only repair and replace parts that are listed in the Chapter "Spare parts" and that are assigned to the unit.
→ Before all work on the device and in the event of work interruptions:
- Relieve pressure from spray guns and devices.
- Secure spray guns against actuation.
- Switch off the energy/compressed air supply.
- Disconnect the control unit from the mains.
→ Observe the operating manual and service manuals at all times when carrying out work.

Fluid sections spare parts list				**150 cm3 PE/TG**	**150 cm3 PE/L**	**150 cm3 PE/T**
Pos	**K**	**Stk**	**Designation**	**Order No.**	**Order No.**	**Order No.**
1		1	Fluid section	2329650	2329664	2329652
2		1	Pipe	368552		
3		1	Cylinder	368553		
4		1	Inlet housing 150	2327888		
5	◆	1	Piston	368555		
6		1	Valve screw	368506		
7	◆ ★	1	Ball guide, inlet	368507		
8		1	Connecting flange	368551		
9	◆	1	Valve seat, inlet	368509		
10	◆	1	Valve seat, outlet	368510		
11		1	Snap ring flange	368561		
12		2	Snap ring half	368512		
13		1	Securing ring	368513		
16		1	Support ring	368516		
17		1	Pressure ring	367519		
18		1	Support ring	368518		
19		1	Pressure ring	368519		

◆ = Wearing parts
★ = Included in the service set (more parts, see Chapter 13.4.2.).
● = Special accessories

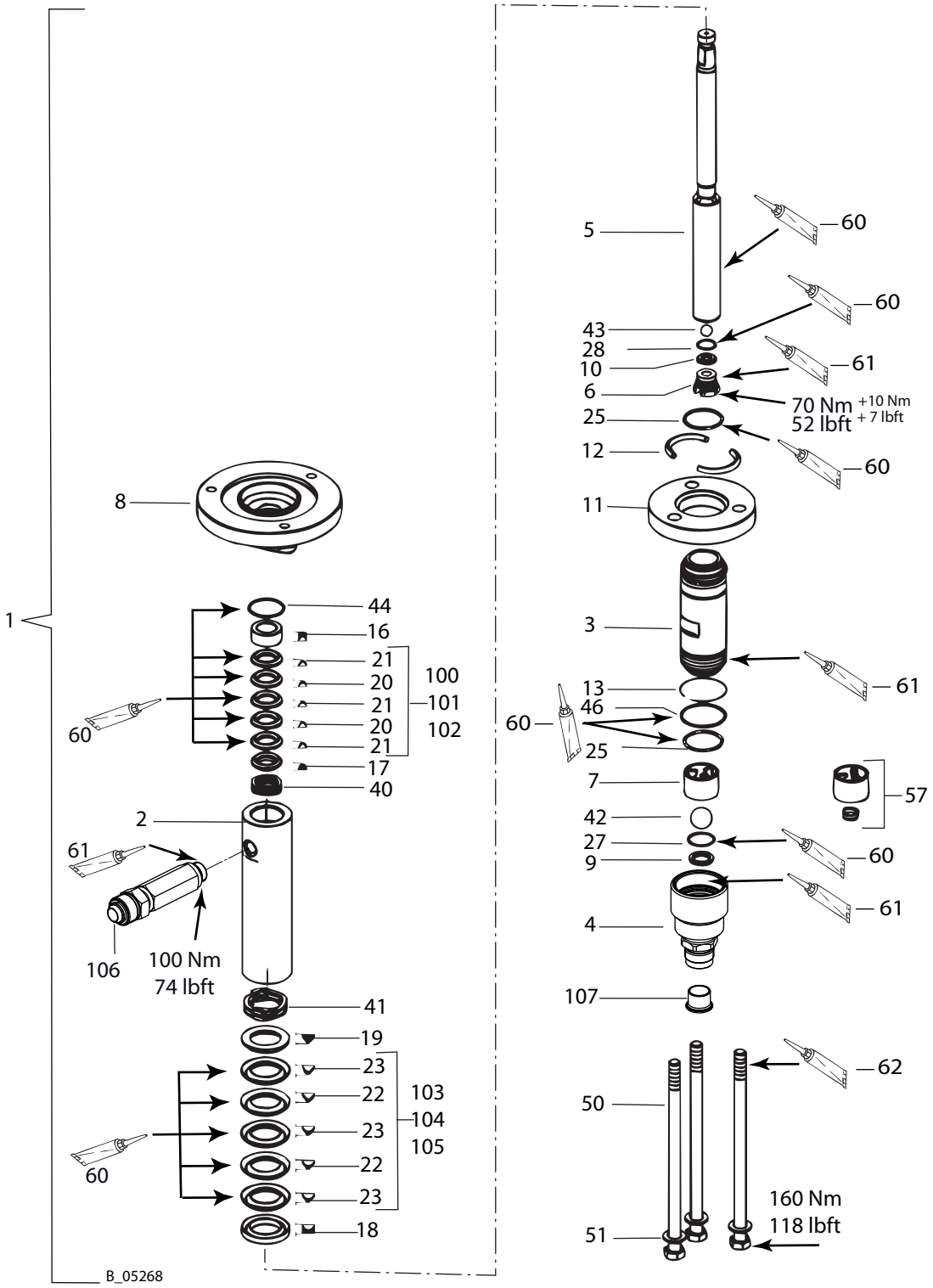

Pos. 4 Tighten by hand on block.

Use a standard wrench only if necessary. In this case use a spanner to hold pos. 3.

Fluid sections spare parts list				150 cm3 PE/TG	150 cm3 PE/L	150 cm3 PE/T
Pos	**K**	**Stk**	**Designation**	**Order No.**	**Order No.**	**Order No.**
100	◆	1	Packing PE/TG, complete (small)	367991		
101	◆	1	Packing PE/T, complete (small)			367992
102	◆	1	Packing PE/L complete (small)		367993	
20	◆ ★	2	Sealing collar TG (small)	367522		
	◆ ★	2	Sealing collar T (small)			367900
	◆	2	Sealing collar L (small)		367922	
21	◆ ★	3	Sealing collar PE (small)	367523	367523	367523
103	◆	1	Packing PE/TG, complete (large)	368991		
104	◆	1	Packing PE/T, complete (large)			368992
105	◆	1	Packing PE/L, complete (large)		368993	
22	◆ ★	2	Sealing collar TG (large)	368522		
	◆ ★	2	Sealing collar T (large)			368900
	◆	2	Sealing collar L (large)		368922	
23	◆ ★	3	Sealing collar PE (large)	368523	368523	368523
25	◆ ★	2	O-ring	368525		
27	◆ ★	1	O-ring	368527		
28	◆ ★	1	O-ring	368528		
40	◆ ★	1	Wave spring (small)	9998670		
41	◆ ★	1	Wave spring (large)	9998671		
42	◆ ★	1	Ball (large)	9943082		
43	◆ ★	1	Ball (small)	9941512		
44	◆ ★	1	O-ring	9974092		
46	◆ ★	1	O-ring	9974107		
50		3	Hexagon screw	9907142		
51		3	Washer	9925011		
57	●	1	Ball guide for high viscosity products	369926		
60		1	Mobilux® EP 2 grease	9998808		
61		1	Anti-seize paste tube	9992609		
62		1	Molykote® DX grease	9992616		
106		1	Fitting SF-MM-G3/8"-M24x1.5-PN530-SSt	2329922		
107		1	Sealing sleeve	2329898		

	1	Service set PE/TG	368990		
	1	Service set PE/T			368994

◆ = Wearing parts

★ = Included in the service set (more parts, see Chapter 13.4.2.).

● = Special accessories

13.6 INLET VALVE WITH VALVE DEPRESSOR

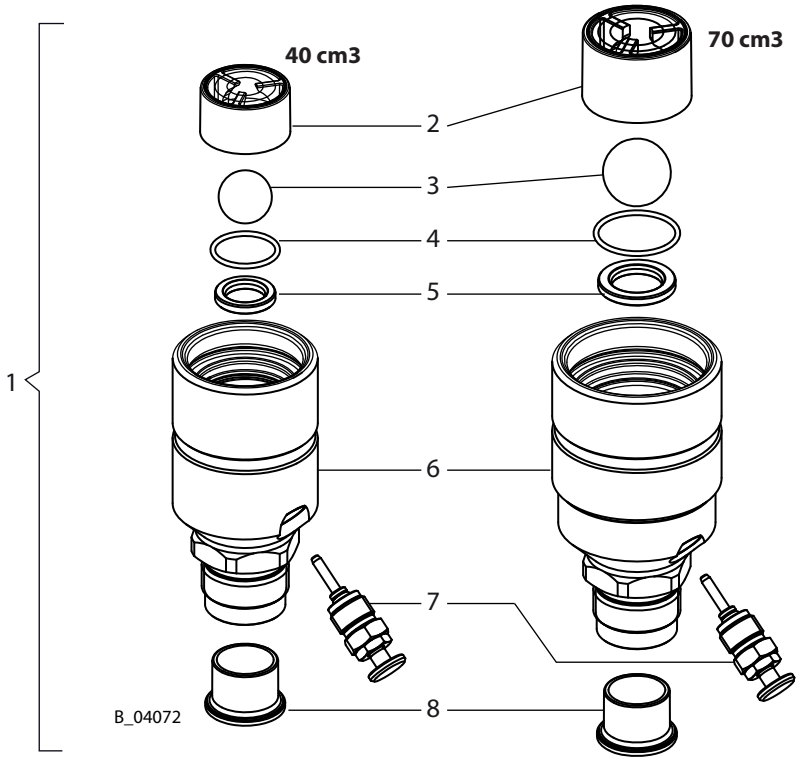

Spare parts list for inlet valve with valve depressor

Pos	K	Stk	Designation	Order No. for fluid section 40 cm3	Order No. for fluid section 70 cm3
1		1	Inlet valve with valve depressor	2329689	2329688
2	◆	1	Ball guide, inlet	367507	368507
3	◆	1	Ball	9941513	9943082
4	◆	1	O-ring	367527	368527
5	◆	1	Valve seat, inlet	367509	368509
6		1	Inlet housing	2329412	2329413
7		1	Valve tappet, complete	368037	
8		1	Sealing sleeve	2329898	

◆ = Wearing parts

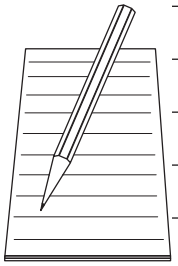

13.7 RELIEF COMBINATION 270 BAR

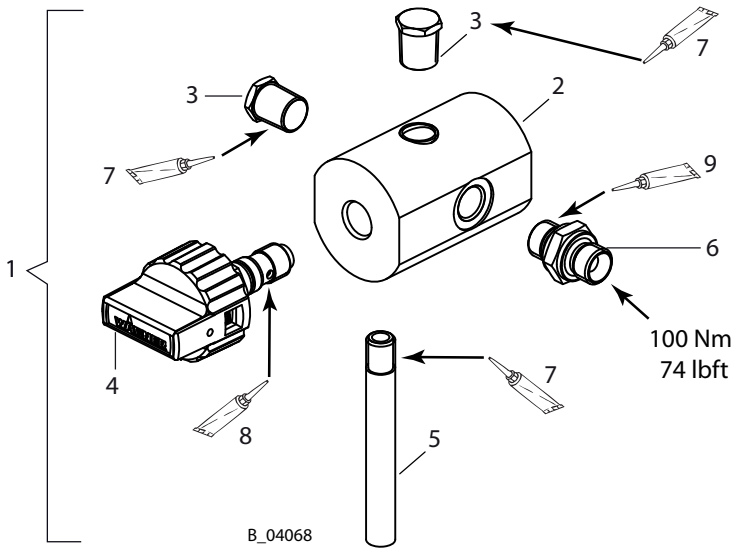

27 MPa; 270 bar; 3916 psi

Spare parts list for relief combination 270 bar

Pos	K	Stk	Order No.	Designation
1		1	2329023	Relief combination
2		1	2324549	Relief housing
3		2	2323718	Hexagon plug
4	◆	1	169248	Relief valve, complete
5		1	2324552	Outlet pipe
6		1	3204611	Fitting-DF-MM-G1/4"-G1/4"-PN530-SSt
7		1	9992831	Loctite® 542, 50ml; 50cc
8		1	9992616	Molykote® DX grease
9		1	9992609	Anti-seize paste tube

◆ = Wearing parts

13.8 STRAIGHT INLINE FILTER 270 BAR

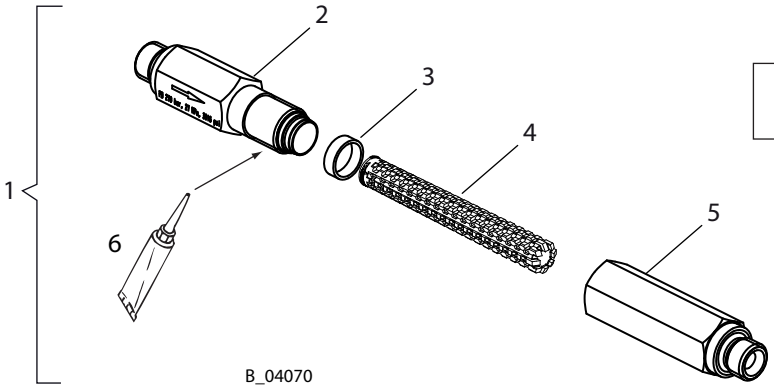

27 MPa; 270 bar; 3916 psi

Spare parts list for straight inline filter 270 bar

Pos	K	Stk	Order No.	Designation
1		1	2324558	Inline filter DN6-PN270-G1/4"-SSt
2		1	2324550	Filter inlet housing
3	◆	1	128389	Gasket
4	◆	1	--	Filter insert, yellow (middle), 100 mesh per inch *
	◆ ●	1	2315723	* Filter insert, red (fine), 200 mesh per inch – 10 pieces
	◆ ●	1	2315724	* Filter insert, blue (middle), 150 mesh per inch – 10 pieces
	◆ ●	1	2315725	* Filter insert, yellow (middle), 100 mesh per inch – 10 pieces
	◆ ●	1	2315726	* Filter insert, white (coarse), 50 mesh per inch – 10 pieces
5		1	2324551	Filter outlet housing
6		1	9992609	Anti-seize paste tube

◆ = Wearing parts

● = Not part of the standard equipment but available as a special accessory.

13.9 ANGLED INLINE FILTER 270 BAR

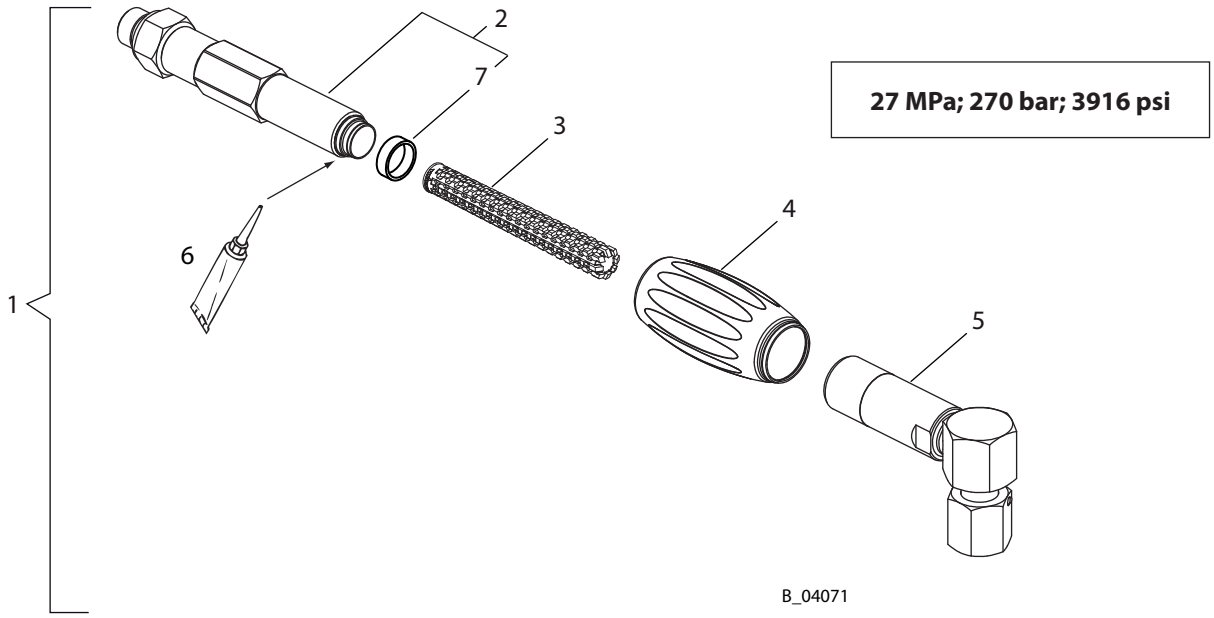

Spare parts list for angled inline filter 270 bar

Pos	K	Stk	Order No.	Designation
1		1	2329026	Inline filter HL DN6-PN270-G1/4"-SSt
2		1	2326045	Filter inlet housing, pre-assembled
3	◆	1	--	Filter insert, yellow (middle), 100 mesh per inch *
	◆ ●	1	2315723	* Filter insert, red (fine), 200 mesh per inch – 10 pieces
	◆ ●	1	2315724	* Filter insert, blue (middle), 150 mesh per inch – 10 pieces
	◆ ●	1	2315725	* Filter insert, yellow (middle), 100 mesh per inch – 10 pieces
	◆ ●	1	2315726	* Filter insert, white (coarse), 50 mesh per inch – 10 pieces
4		1	2311491	Turning handle
5		1	2325950	Filter outlet housing 90°, pre-assembled
6		1	9992609	Anti-seize paste tube
7	◆	1	128389	Gasket

◆ = Wearing parts

● = Not part of the standard equipment but available as a special accessory.

13.10 HIGH-PRESSURE FILTER 270 BAR

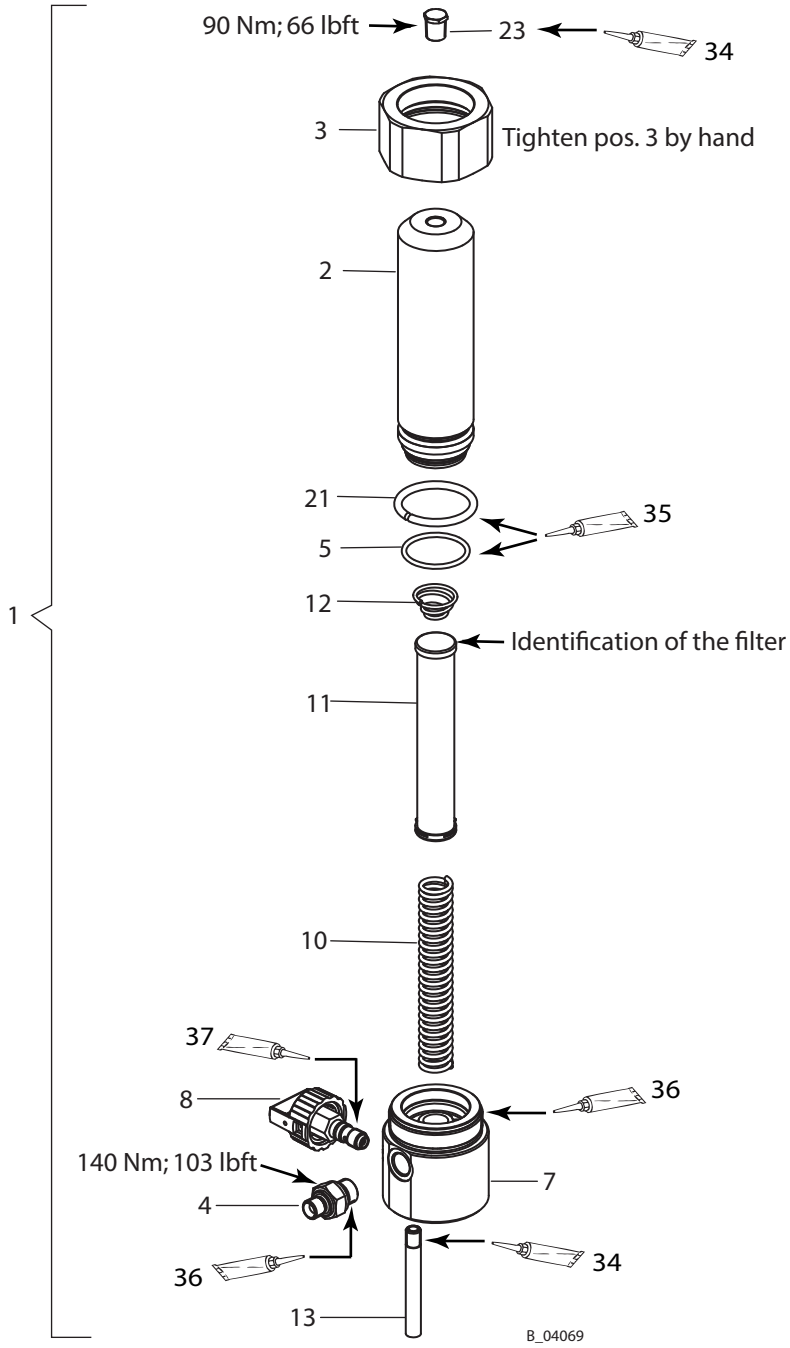

27 MPa; 270 bar; 3916 psi

Spare parts list for high-pressure filter 270

			Ball valve version in:	Stainless steel
Pos	**K**	**Stk**	**Designation**	**Order No.**
1		1	HP filter DN10-PN270 SSt, complete	2329024
2		1	Filter housing	2324542
3		1	Union nut	2324543
4		1	Reducing double fitting with 2x60°	2325826
5	◆	1	O-ring	9955863
7		1	Distribution housing	2324544
8	◆	1	Relief valve	169248
10		1	Filter support	9894245
11		1	Filter cartridge *	
	◆ ●		* Filter sieve, 200 mesh per inch (fine)	295721
	◆		* Filter sieve, 100 meshes per inch (medium), mesh width 0.16 mm	3514068
	◆ ●		* Filter sieve, 50 mesh per inch (rough)	3514069
	◆ ●		* Filter sieve, 20 mesh per inch (rough)	291564
12	◆	1	Cone spring	3514058
13		1	Outlet pipe	2324552
21		1	Pressure ring d45	2325562
23		1	Hexagon plug	2323718
34		1	Loctite® 542 50 ml; 50 cc	9992831
35		1	Mobilux® EP2 grease	9998808
36		1	Anti-seize paste tube	9992609
37		1	Molykote® DX grease	9992616

◆ = Wearing parts

● = Not part of the standard equipment but available as a special accessory.

DANGER

Incorrect maintenance/repair!
Danger to life and equipment damage.

→ Only a WAGNER service center or a suitably trained person may carry out repairs and replace parts.
→ Only repair and replace parts that are listed in the Chapter "Spare parts" and that are assigned to the unit.
→ Before all work on the device and in the event of work interruptions:
- Relieve pressure from spray guns and devices.
- Secure spray guns against actuation.
- Switch off the energy/compressed air supply.
- Disconnect the control unit from the mains.
→ Observe the operating manual and service manuals at all times when carrying out work.

13.11 HIGH-PRESSURE FILTER 530 BAR

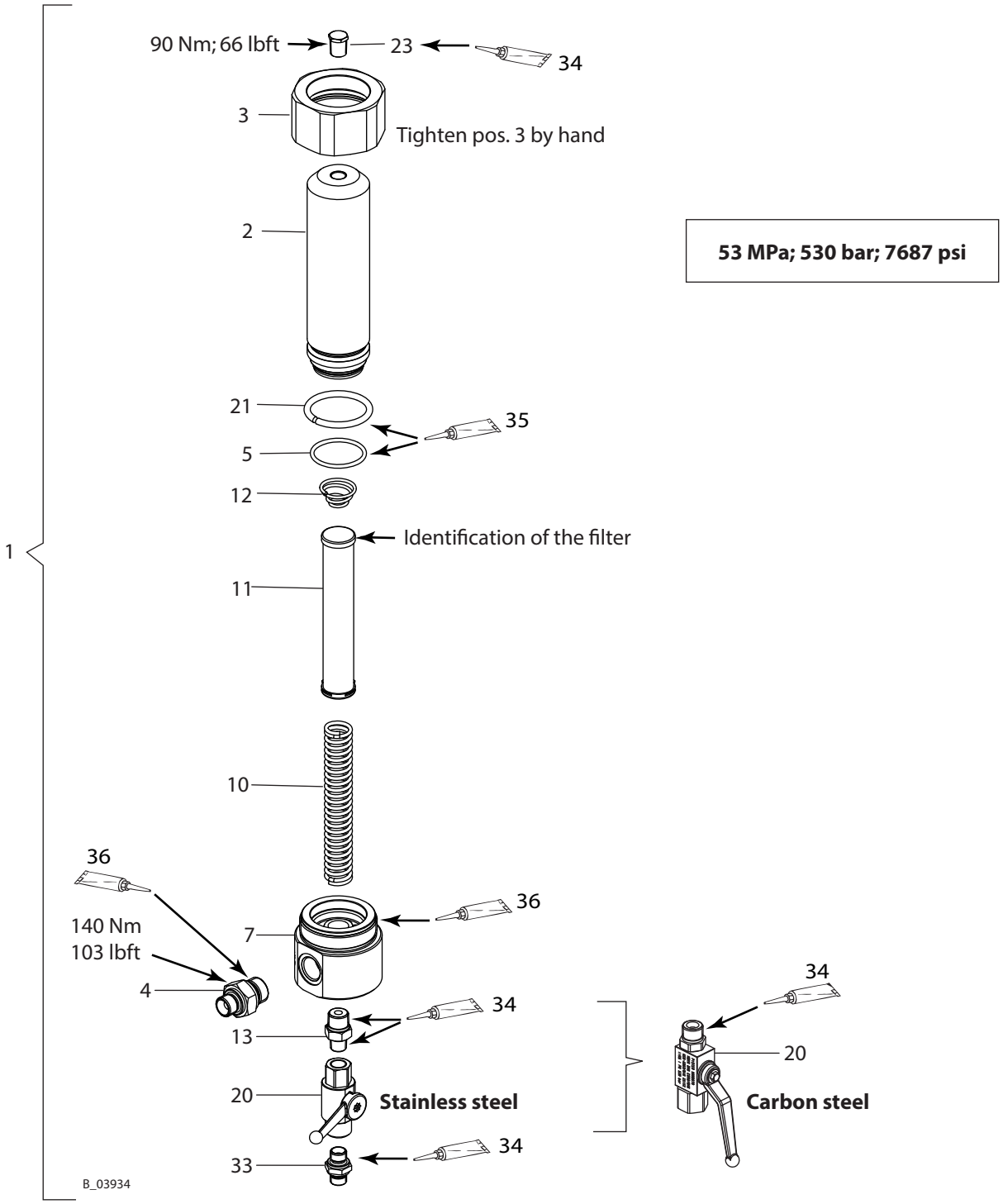

Spare parts list for high-pressure filter 530

			Ball valve version in:	Stainless steel	Carbon steel
Pos	**K**	**Stk**	**Designation**	**Order No.**	**Order No.**
1		1	HP filter DN12-PN530, complete	2329025	2335334
2		1	Filter housing	2324542	
3		1	Union nut	2324543	
4		1	Fitting-DF-MM-G1/2-G3/8-PN530-SSt	2330780	
5	◆	1	O-ring	9955863	
7		1	Distribution housing for ball valve	2324670	
10		1	Filter support	9894245	
11		1	Filter cartridge *		
	◆ ●		* Filter sieve, 200 mesh per inch (fine)	295721	
	◆		* Filter sieve, 100 meshes per inch (medium), mesh width 0.16 mm	3514068	
	◆ ●		* Filter sieve, 50 mesh per inch (rough)	3514069	
	◆ ●		* Filter sieve, 20 mesh per inch (rough)	291564	
12	◆	1	Cone spring	3514058	
13		1	Fitting-DF-MM-R3/8-R1/4-PN530-SSt	2328291	
20	◆	1	Ball Valve	2330156	9998679
21		1	Pressure ring d45	2325562	
23		1	Hexagon plug	2323718	
33		1	Double connector	3204611	2325826
34		1	Loctite® 542 50 ml; 50 cc	9992831	
35		1	Mobilux® EP2 grease	9998808	
36		1	Anti-seize paste tube	9992609	

◆ = Wearing parts

● = Not part of the standard equipment but available as a special accessory.

DANGER

Incorrect maintenance/repair!
Danger to life and equipment damage.

→ Only a WAGNER service center or a suitably trained person may carry out repairs and replace parts.
→ Only repair and replace parts that are listed in the Chapter "Spare parts" and that are assigned to the unit.
→ Before all work on the device and in the event of work interruptions:
- Relieve pressure from spray guns and devices.
- Secure spray guns against actuation.
- Switch off the energy/compressed air supply.
- Disconnect the control unit from the mains.
→ Observe the operating manual and service manuals at all times when carrying out work.

13.12 AIRCOAT REGULATOR AND AIRCOAT FILTER REGULATOR

AirCoat regulator

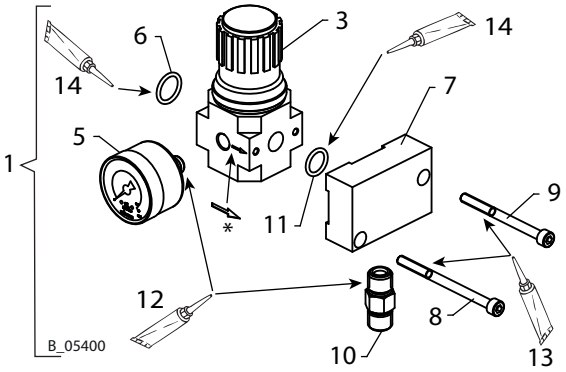

AirCoat filter regulator

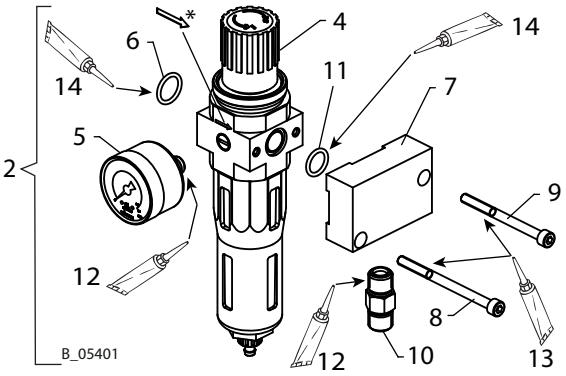

Pos 3 or 4:

* Observe the flow direction (direction of arrow to the housing)

Pos 5:

Screw in the pressure gauge until the white sealing ring is completely in the filter control valve. Thereafter continue turning the pressure gauge only to align the display scale.

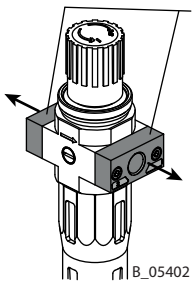

Pos 4:

Before assembling, remove both threaded plates and four screws.

Spare parts list AirCoat regulator and AirCoat filter regulator				AirCoat regulator	AirCoat filter regulator
Pos	**K**	**Stk**	**Designation**	**Order No.**	**Order No.**
1		1	AirCoat regulator set	2328611	
2		1	AirCoat filter regulator set		2333478
3	◆	1	Pressure regulator LR-1/4-D-O-I-Mini	2309972	
4	◆	1	Filter control valve		2331950
5	◆	1	Pressure gauge 0-10 bar RF40 (d40)	9998677	
6	◆	1	O-ring	9974166	
7		1	Holding plate	2325527	
8		1	Hexagon socket cylinder head screw	9906021	
9		1	Hexagon socket cylinder head screw	9900320	
10		1	Double fitting R1/4-R1/4	9994627	
11	◆	1	O-ring	9971313	
12		1	Loctite® 542	9992831	
13		1	Molykote® DX grease	9992616	
14		1	Mobilux® EP 2 grease	9998808	

◆ = Wearing parts

13.13 TROLLEY FOR WILDCAT, PUMA AND LEOPARD

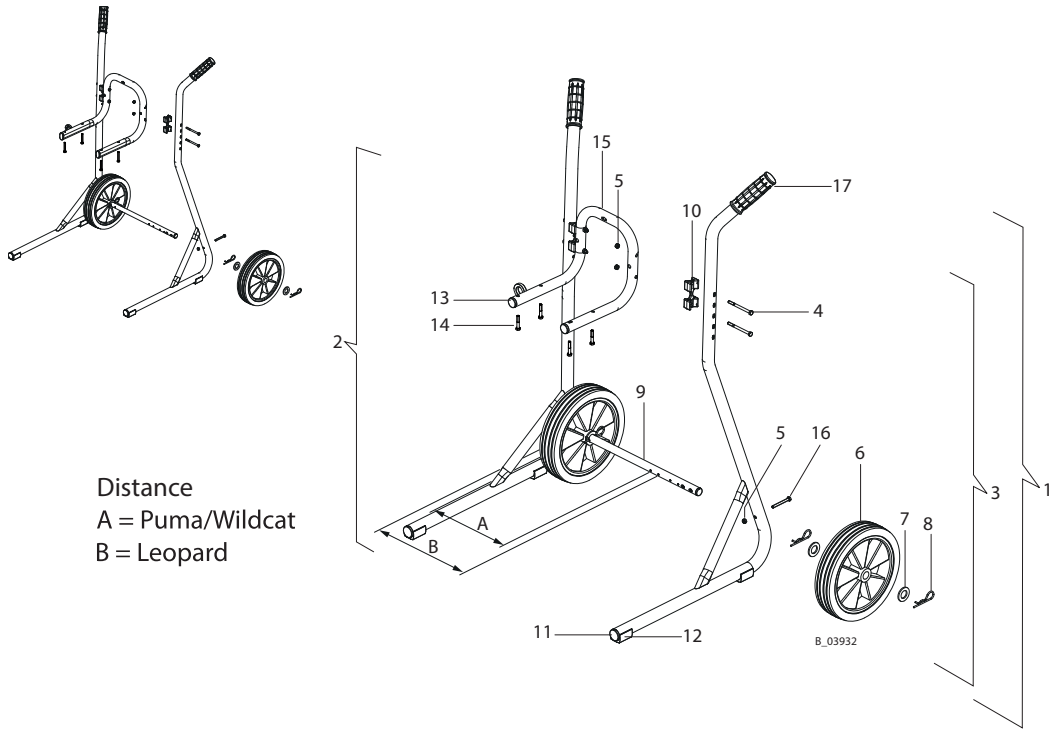

Trolley spare parts

Pos	K	Stk	Designation	4" Order No. for Wildcat	4" Order No. for Puma	6" Order No. for Leopard
1		1	Trolley, complete	2325901		2325916
2		1	Frame, left, 4"-6" (welded)	--		
3		1	Frame, right, 4"-6" (welded)	--		
4		4	Hexagon screw DIN931 M6x75	9907140		
5		6	Self-locking hexagon nut, M6	9910204		
6	◆	2	Wheel, D250	2304440		
7		4	Washer	340372		
8		4	Cotter pin	9995302		
9		1	Wheel axle 4"-6"	--		
10	◆	2	Connecting part 4"-6"	367943		
11		2	Tube plug, ribbed	--		
12		2	Saddle feet for round tubes	--		
13		2	Plug	--		
14		4	Hexagon screw	9900218		9900126
15		1	Wall mount	2332143		2332145
16		2	Hexagon screw without shaft M6x55	3061695		
17	◆	2	Handle	9998747		

◆ = Wearing parts

13.14 TROLLEY FOR LEOPARD 48-110 AND JAGUAR

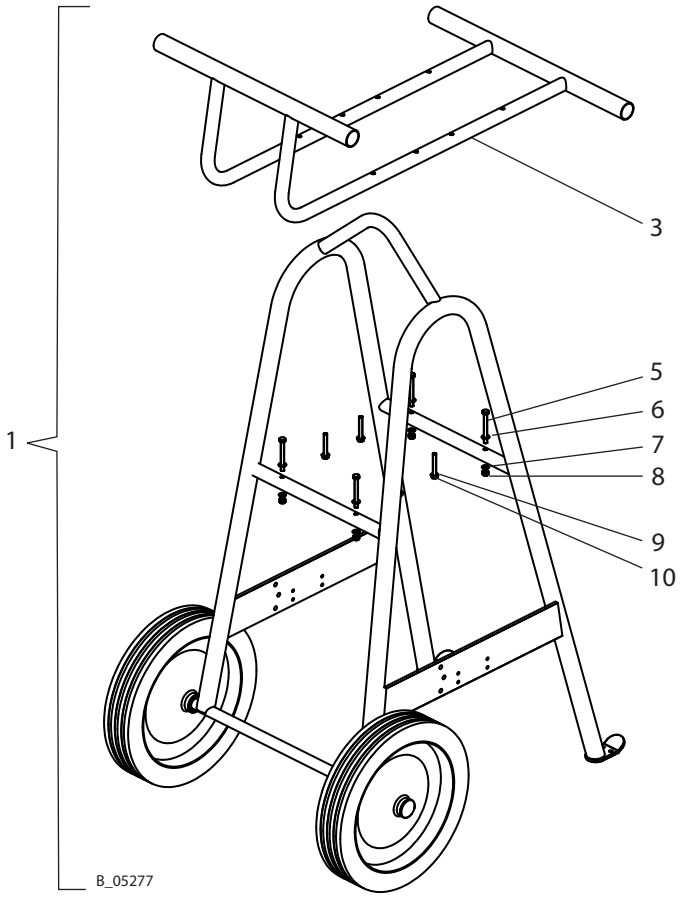

Assembly

Mount bracket holder (3) above the crossbar (4).

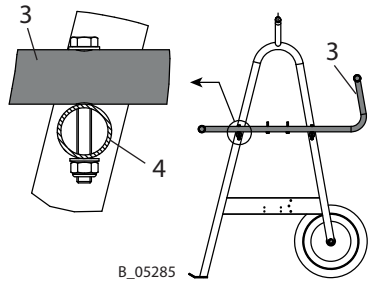

Spare parts list for PC heavy duty trolley			6"	9"
Pos K	**Stk**	**Designation**	**Order No. for Leopard 48-110**	**Order No. for Jaguar 75-150**
1	1	PC heavy duty trolley	2339705	
3	1	Bracket holder	--	
5	4	Hexagon screw	9900246	
6	4	Washer, A8.4	9920102	
7	4	Contact washer, M8	3155404	
8	4	Self-locking hexagon nut, M8	9910208	
9	4	Washer, A6.4 or A8.4	9925031	9920102
10	4	Hexagon screw	9900126	9900130

◆ = Wearing parts

14 WARRANTY AND CONFORMITY DECLARATIONS

14.1 IMPORTANT NOTES REGARDING PRODUCT LIABILITY

As a result of an EC regulation effective from January 1, 1990, the manufacturer shall only be liable for his product if all parts originate from him or are approved by him, and if the devices are properly mounted, operated and maintained.
The manufacturer will not be held liable or will only be held partially liable if third-party accessories or spare parts have been used.
With genuine WAGNER accessories and spare parts, you have the guarantee that all safety regulations are complied with.

14.2 WARRANTY CLAIM

Full warranty is provided for this device:
We will at our discretion repair or replace free of charge all parts which within 36 months in single-shift, 18 months in double-shift or 9 months in triple-shift operation from date of receipt by the purchaser are found to be wholly or substantially unusable due to causes prior to the sale, in particular faulty design, defective materials or poor workmanship.
The type of warranty provided is such that the device or individual components of the device are either replaced or repaired as we see fit. The resulting costs, in particular shipping charges, road tolls, labour and material costs will be borne by us except where these costs are increased due to the subsequent shipment of the device to a location other than the address of the purchaser.
We do not provide warranty for damage that has been caused or contributed to for the following reasons:
Unsuitable or improper use, faulty assembly or commissioning by the purchaser or a third party, normal wear, negligent handling, defective maintenance, unsuitable coating products, substitute products and the influence of chemical, electrochemical or electrical agents, except when the damage is attributable to us.
Abrasive coating products such as red lead, emulsions, glazes, liquid abrasives, zinc dust paints and so forth reduce the service life of valves, packaging, spray guns, nozzles, cylinders, pistons etc. Wear and tear due to such causes are not covered by this warranty.
Components that have not been manufactured by WAGNER are subject to the original warranty of the manufacturer.
Replacement of a component does not extend the period of warranty of the device.
The device should be inspected immediately upon receipt. To avoid losing the warranty, we or the supplier company are to be informed in writing about obvious faults within 14 days upon receipt of the device.
We reserve the right to have the warranty compliance met by a contracting company.
The services provided by this warranty are dependent on evidence being provided in the form of an invoice or delivery note. If the examination discovers that no warranty claim exists, the costs of repairs are charged to the purchaser.
It is clearly stipulated that this warranty claim does not represent any constraint on statutory regulations or regulations agreed to contractually in our general terms and conditions.

J. Wagner AG

14.3 CE DECLARATION OF CONFORMITY

Herewith we declare that the supplied version of pneumatic pumps and their spraypacks:

Wildcat	Puma		Leopard		Jaguar
10-70	28-40	21-110	35-70	48-110	75-150
18-40	15-70	15-150	35-150		

complies with the following guidelines:

2006/42/EC	94/9/EC

Applied standards, in particular:

DIN EN ISO 12100: 2010	DIN EN ISO 13732-1: 2008	DIN EN 13463-1: 2009
DIN EN 809: 1998+A1: 2009+AC: 2010	DIN EN 14462: 2005+A1: 2009	DIN EN 13463-5: 2011
DIN EN ISO 4413: 2010	DIN EN 12621: 2006+A1: 2010	DIN EN ISO/IEC 80079-34: 2011
DIN EN ISO 4414: 2010	DIN EN 1127-1: 2011	

Applied national technical standards and specifications, in particular:

DGUV regulation 100-500 (BGR 500 Chapter 2.29 and 2.36)	TRBS 2153

Identification: CE Ex II 2 G c IIB T3/T4 X

T3: No dry running protection.
T4: With dry running protection.

EC Certificate of Conformity
The CE certificate of conformity is enclosed with this product. If needed, further copies can be ordered through your WAGNER dealer by specifying the product name and serial number.

Order number: 2302304

14.4 NOTES ON NATIONAL REGULATIONS AND GUIDELINES

a) Betr.Sich.V. — Plant Safety Ordinance
b) BGI 740 — Painting rooms and equipment
c) BGR 180 — Equipment for cleaning work pieces with solvents
d) DGUV regulation 100-500 — Operating working materials
e) TRBS 2153 — Avoidance of ignition dangers due to electrostatic charges
f) TRBS 1201 — Checking working materials and systems which require monitoring
- Part 1: Checking systems in areas subject to explosion hazards and checking of work stations in areas subject to explosion hazards
- Part 3: Repairs to devices, protective systems, safety, control and regulation fixtures, in the sense of the 94/9/EC Directive - Determination of checking necessity according to § 14 sec. 6 BetrSichV (Industrial Safety Regulations)

Note: All titles can be ordered from Heymanns Publishing House in Cologne, or they can be found on the Internet.

WAGNER

DIN ISO 9001 WAGNER CERTIFIED

Order No. 2333538
Edition 04/2015

Germany
J. WAGNER GmbH
Otto-Lilienthal-Str. 18
Postfach 1120
D- 88677 Markdorf
Phone +49/ (0)7544 / 5050
Telefax +49/ (0)7544 / 505200
E-mail service.standard@wagner-group.com

Switzerland
J. WAGNER AG
Industriestrasse 22
Postfach 663
CH- 9450 Altstätten
Phone +41/ (0)71 / 757 2211
Telefax +41/ (0)71 / 757 2222

More contact addresses on the internet at:
www.wagner-group.com
Company/Locations/WAGNER worldwide

Subject to changes without notice

Document No. 11145601
Version B